A) DESCRIPTION

The HD Retrievable Packer is a heavy duty service packer ideally suited for all types of squeeze cementing, formation fracturing, high pressure acidizing, etc. It is a large opening compression set packer with hydraulic button-type hold down. This packer withstands high pressure from above or below and uses a 3-element packing system, J-slot, and a drag block mechanism for easy setting. This packer has a built-in unloader which circulates across the hold down buttons to improve retrievability and run in performance.

B) SPECIFICATION GUIDE

CASING			TOOL		THREAD CONNECTIONS BOX UP / PIN DOWN	PART NUMBER
SIZE (INCHES)	**WEIGHT** (LBS/FT)	**RECOMMENDED HOLE SIZE** (INCHES)	**GAGE OD** (INCHES)	**NOMINAL ID** (INCHES)		
5	11.5 – 15.0	4.408 – 4.560	4.125	1.88	2-3/8 EUE	61350RS 61350RSH[1] 61350RSV[2]
5-1/2	26.0 – 28.4	4.440 - 4.548	4.125	1.88	2-3/8 EUE	

Elastomer Trim Options: [1]HSN, [2]Viton

NOTE1: Tools listed are right-hand set / straight pick-up.

DIFFERENTIAL PRESSURE (MAX)	TENSILE LOAD THRU TOOL (MAX)	HANGING WEIGHT (MAX)	MAXIMUM TORQUE
10,000 PSI	58,000 LBS	58,000 LBS*	2,000 FT-LBS

*Casing must be cemented for this load rating.

CAUTION1: Before running the tool, check the pressure affected areas chart and consider other effects to be certain that the unloader will remain closed during operation.

CAUTION2: If the HD Packer is run with a retrievable bridge plug, make sure the bridge plug J-slot is compatible with the J-slot on the packer. Whichever direction you set the plug, the packer should set in the opposite direction.

C) PRE-INSTALLATION INSPECTION PROCEDURES

CAUTION3: D&L ships tool connections made-up hand-tight—labeled with hand-tight tape on the tool—unless stated otherwise. Properly tighten connections before operating tool (Fig. 1).

Fig. 1

GENERAL THREAD CONNECTION TORQUE RECOMMENDATIONS			
STUB ACME / ACME THREADS	**INTERNAL TAPERED TUBING THREADS**		**PREMIUM THREADS**
	UP TO 2-3/8”	**GREATER THAN 2-3/8”**	
600 – 800 FT-LBS	600 – 800 FT-LBS	800 – 1,200 FT-LBS	Consult thread manufacturer’s recommendations.

C) PRE-INSTALLATION INSPECTION PROCEDURES (cont’d)

GENERAL SCREW TORQUE RECOMMENDATIONS									
SCREW SIZE (INCHES)	#6	#8	#10	1/4	5/16	3/8	7/16	1/2	5/8 and larger
TORQUE RANGE (INCH-POUNDS)	5 – 8	10 – 15	18 – 25	25 – 40	50 – 80	90 – 135	160 – 210	250 – 330	450 - 650

Before first use, D&L recommends disassembly and inspection of the tool unless stated otherwise. Ensure parts have not been damaged during shipping. Replace damaged parts with D&L replacement parts. Contact D&L sales for replacement part information.

Re-assemble the tool after inspection. Install parts in the correct order and orientation. Properly tighten connections.

Before re-using the tool, D&L recommends disassembly and inspection of the tool. Clean parts and ensure parts are in good working condition. Replace worn or damaged parts with D&L replacement parts.

DRAG BLOCK SPRING (MIN HEIGHT)	**HOLD DOWN BUTTON SPRING** (MIN HEIGHT)
0.45 INCHES	0.45 INCHES

Fig. 2

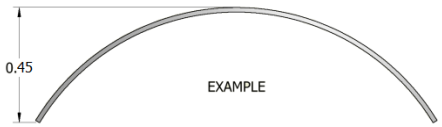

NOTE3: Before assembly, measure height of drag block springs and hold down button springs. Refer to spring height table – if height of an individual spring is less than the minimum height, replace spring(s).

When redressing the tool, D&L recommends replacement of all seals, elements, o-rings, shear screws, etc. Contact D&L sales for redress kit and/or other replacement part information.

D) SETTING PROCEDURES

CAUTION4: Do not run the tool without properly tightening connections. Running the tool with loose connections may damage the tool and cause malfunction.

Run to setting depth. The unloader remains open while running in. Pick up the work string and rotate 1/4 turn at the packer. Slack off weight and set down on the packer to set the slips, close the unloader and compress the packing elements. A minimum weight of 10,000 lbs. at the packer is required to pack off the elements.

CAUTION5: With any hold-down type packer, run the tool slowly to help prevent dulling of the hydraulic buttons.

E) RELEASING PROCEDURES

Pick up on the work string to open the unloader, allowing time for the tubing and casing pressure to equalize. Refer to Pressure Affected Area Guide to determine weight in addition to pipe weight required to pick up on packer. Continued upward movement of the work string unsets the slips, relaxes the packing elements and re-jays the packer. The tool may now be moved and reset, or pulled from the well.

F) STORAGE RECOMMENDATIONS

When preparing the tool for storage, follow the Pre-Installation Inspection Procedures. Re-assemble the tool with connections hand-tight only and in running position if applicable. Elastomers should be in a relaxed state—free from tension, compression, and other stresses that could cause deformation.

Store the tool, if possible, in an enclosed, temperature and humidity controlled environment. Avoid excessively high temperatures over long periods of time. Shield elastomeric parts from ultraviolet light sources. Keep tool dry and protected from condensation. Do not store in contact with or near volatile or corrosive chemicals. Do not store near ozone generating equipment or operations such as welding.

G) PRESSURE AFFECTED AREA GUIDE

When set downhole, the packer mandrel is subjected to a force created by differential pressure above or below the packer that acts on the pressure affected area (i.e., the piston effect). Depending on the tubing size and weight and the seal area of the packer the force created by differential pressure acts upwards or downwards on the packer mandrel. An upward force, designated as a negative (-) value, acts to push the packer mandrel up hole and must be accounted for to ensure that the packer remains set. A downward force, designated as a positive value, acts to push the packer mandrel down hole and must be accounted for when releasing the packer. Other factors (e.g., tubing movement due to temperature change) must be considered separately to determine all the forces acting on the packer.

PACKER SIZE (IN)	**TUBING TO PACKER**			**PRESSURE AFFECTED AREA** (IN^2)			
	SIZE (IN)	**WEIGHT** (LB/FT)	**ID** (IN)	**ABOVE**		**BELOW**	
5	1.900	2.40	1.650	1.373	(DOWN)	0.286	(DOWN)
		2.90	1.610	1.373	(DOWN)	0.184	(DOWN)
	2.375	4.00	2.041	-0.222	(UP)	1.420	(DOWN)
		4.70	1.995	-0.222	(UP)	1.274	(DOWN)
		5.95	1.867	-0.222	(UP)	0.886	(DOWN)
	2.875	6.50	2.441	-2.284	(UP)	2.828	(DOWN)
		7.90	2.323	-2.284	(UP)	2.386	(DOWN)
		8.70	2.259	-2.284	(UP)	2.156	(DOWN)
	3.500	7.70	3.068	-5.413	(UP)	5.541	(DOWN)
		9.30	2.992	-5.413	(UP)	5.179	(DOWN)
		10.20	2.922	-5.413	(UP)	4.854	(DOWN)
		12.95	2.750	-5.413	(UP)	4.088	(DOWN)

Example: Consider a 5” X 2-3/8” HD Packer set on 2.375”, 4.70 lbs/ft tubing with a differential pressure of 3,000 PSI in the annulus around the tubing above the packer. What is the force acting on the seal area of the mandrel?

To calculate the force (lbs) acting on the seal area of the mandrel, refer to the Pressure Affected Area Guide for a 5” X 2-3/8” HD Packer run on 2.375”, 4.70 lbs/ft tubing. In this example, the differential pressure from above the packer acts on the seal area of the packer mandrel across a pressure affected area of -0.222 in^2. Multiplying the differential pressure (3,000 PSI) by the pressure affected area (-0.222 in^2) results in a force of -666 lbs. The piston effect on the packer mandrel is an upward force of 666 lbs.

H) ELASTOMER TRIM TEMPERATURE GUIDE

NITRILE (STD)			
TEMPERATURE RANGE (F°)	**DUROMETER**		
	END	**MIDDLE**	**END**
40° - 125°	80	70	80
125° - 250°	90	70	90
150° - 250°	90	80	90
250° +	Contact D&L Sales		

RUBBER TYPE	**TEMPERATURE RANGE**
NITRILE	40° - 250°F
HSN (HNBR)	70° - 300°F
VITON	100° - 350°F

I) RECOMMENDED TOOLS

I-1) HAND TOOLS

- VISE
- GLOVES
- ALLEN WRENCHES
- TAPE MEASURE
- O-RING PICK
- BAR
  - 1/2-INCH
  - 3/4-INCH
- PAINT BRUSH, 2-INCH
- PIPE WRENCH, 3-FT (2 EA)
- “CHEATER” PIPE, 4-FT LONG
- ADJUSTABLE WRENCH, 12-INCH
- CORDLESS DRILL, 18V
- SNAP RING SPREADER PLIERS
- ALIGNING PUNCH
- SCREWDRIVER SET, FLAT-TIPPED
- SOCKET SETS
  - 3/8-INCH DRIVE
  - 1/2-INCH DRIVE
- HAMMERS
  - SLEDGE
  - BALL PEEN
  - DEAD BLOW

I-2) SPECIAL TOOLS

ITEM	QTY	DESCRIPTION	PART NUMBER
T1	1	DRAG BLOCK ASSEMBLY TOOL	AT055110
T2	1	BUTTON REMOVAL TOOL	AT-BRT000
T3	1 GAL	KOPR-KOTE® ANTI-SEIZE LUBRICANT	DL-KOPR-KOTE-1G

J) DISASSEMBLY

J-1) Clamp top sub (1) in vise.

J-1.1) Unscrew and remove set screws (30) from J-pin bottom sub (23). Move J-body (20) as needed to access screws.

J-1.2) Unscrew and remove J-pin bottom sub (23) from inner mandrel (2).

NOTE$_3$: Drag block body assembly must be free to rotate.

J-1.2.1) Remove o-ring (34) from J-pin bottom sub (23).

J-1.3) Unscrew and remove set screws (31) from J-body (20).

J-1.4) Unscrew and remove J-body (20) from drag block body (18) (**NOTE$_2$**: Left-hand threads).

J-1.5) Unscrew and remove rubber mandrel cap (19) from rubber mandrel (11).

NOTE$_4$: For added leverage, insert a rod through rubber retainer (15) and rubber mandrel (11).

J-1.6) Wedge lower slips (17) outward (if needed). Remove drag block body assembly from rubber mandrel (11) and disassemble:

J-1.6.1) Compress drag blocks (22) with drag block assembly tool (T1). Remove strap retainer (6) from drag block body (18).

J-1.6.2) Release drag blocks. Remove drag blocks (22) and drag block springs (3).

J-1.6.3) Remove wedges (if needed). Remove lower slips (17) and lower slip springs (25) from drag block body (18).

J-1.7) Unscrew and remove lower cone (16) from rubber retainer (15).

J-1.8) Unscrew rubber mandrel (11) from valve body (29).

J-1.9) Remove rubber mandrel assembly from inner mandrel (2) and disassemble:

J-1.9.1) Remove elements (13, 14), rubber spacers (12), and rubber retainer (15) from rubber mandrel (11).

J-1.10) Unscrew and remove valve body (29) from central body (10).

J-1.10.1) Remove o-ring (36) from valve body (29).

J-1.11) Unscrew and remove central body (10) from hold down body (5).

J-1.12) Unscrew and remove seal retainer (28) from seal receptacle (9).

J-1.12.1) Remove o-ring (36) and quad seal (24) from seal retainer (28).

J) DISASSEMBLY (cont’d)

J-2) Remove top sub (1) from vise. Clamp lower end of inner mandrel (2) in vise.

CAUTION$_6$: Do NOT wrench or clamp on seal surface.

J-2.1) Unscrew and remove set screws (30) from top sub (1).

J-2.2) Unscrew and remove top sub (1) from inner mandrel (2).

J-2.2.1) Remove o-ring (35) from top sub (1).

J-2.3) Unscrew and remove hold down cap (4) from hold down body (5).

J-2.3.1) Remove o-ring (41) from hold down cap (4).

J-2.4) Remove upper strap retainer (6) from hold down strap (27). Temporarily move lower strap retainer off hold down strap (27). Lower strap retainer (6) will be removed later.

J-2.5) Unscrew and remove flat head cap screws (32) from hold down body (5).

J-2.6) Remove hold down straps (27) from hold down body (5).

J-2.7) Remove hold down button springs (21) from hold down body (5).

J-2.8) Remove hold down buttons (26) from hold down body (5) with button removal tool (T2).

J-2.8.1) Remove o-rings (33) from hold down buttons (26).

J-2.9) Remove hold down body (5) from inner mandrel (2).

J-2.9.1) Remove o-rings (39, 40) from hold down body (5).

J-2.10) Remove lower strap retainer (6) from inner mandrel (2).

J-2.11) Remove compensating piston (8) from compensating mandrel (7).

J-2.11.1) Remove o-rings (37, 38) from compensating piston (8).

J-2.12) Unscrew and remove compensating mandrel (7) from seal receptacle (9).

J-3) Unclamp and remove inner mandrel (2) from vise.

J-4) Remove seal receptacle (9) from inner mandrel (2).

J-4.1) Remove o-ring (37) from seal receptacle (9).

K) ASSEMBLY

NOTE5: Clean and inspect all parts. Replace all worn and damaged parts. Install parts in proper order, and orientation and tighten/torque all connections properly.

CAUTION7: To ensure tool operates properly, install o-rings in o-ring grooves **NOT** thread reliefs (Fig. 2).

NOTE6: Apply KOPR-KOTE® anti-seize lubricant (T3) on STUB ACME and drill pipe connections when making up connections.

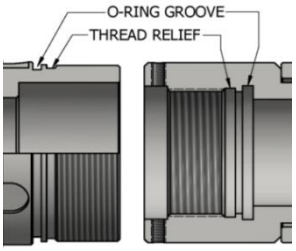

Fig. 2

K-1) Install o-ring (37) into groove in seal receptacle (9).

K-2) From lower end of mandrel (2), install seal receptacle (9) onto mandrel (2).

K-3) Clamp lower part of inner mandrel (2) in vise.

CAUTION6: Do NOT wrench or clamp on seal surface.

K-3.1) From upper end of mandrel (2), Screw compensating mandrel (7) into seal receptacle (9).

CAUTION8: Do not rip or tear o-ring during installation.

K-3.2) Install o-rings (37, 38) in grooves in compensating piston (8).

K-3.3) Install compensating piston (8) onto compensating mandrel (7).

NOTE7: Ensure compensating piston (8) is installed in correct direction (Fig. 3).

CAUTION8: Do not rip or tear o-ring during installation.

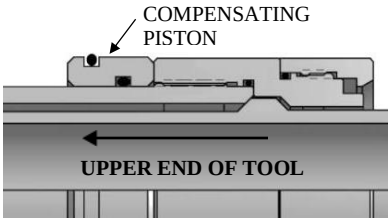

Fig. 3

K-3.4) Install lower strap retainer (6) onto inner mandrel (2).

K-3.5) Install o-rings (39, 40) in grooves in hold down body (5).

K-3.6) Install hold down body (5) onto inner mandrel (2).

K-3.7) Install o-rings (33) in grooves in hold down buttons (26).

K-3.8) Install hold down buttons (26) into hold down body (6) (Fig. 4).

CAUTION8: Do not rip or tear o-rings during installation.

Fig. 4

K-3.9) Set hold down button springs (21) in place in hold down buttons (26).

NOTE8: Uses two (2ea) springs per hold down button (Fig. 5).

K-3.10) Set hold down straps (27) in place on hold down buttons (26) (Fig. 5).

K-3.11) Screw flat head cap screws (32) into hold down body (5) (Fig. 5).

K-3.12) Install lower strap retainer (6) onto hold down body (6) capturing lower ends of hold down straps (27). Install upper strap retainer (6) onto hold down body (6) capturing upper ends of hold down straps (27).

K-3.13) Install o-ring (41) in groove in hold down cap (4).

K-3.14) Screw hold down cap (4) onto hold down body (5).

K-3.15) Insert o-ring (35) in groove in top sub (1).

K-3.16) Screw top sub (1) onto inner mandrel (2).

CAUTION8: Do not rip or tear o-rings during installation.

K-3.17) Screw set screws (30) into top sub (1).

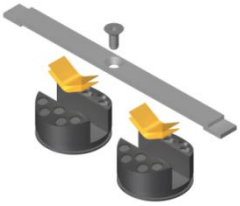
Fig. 5

K-4) Unclamp and remove inner mandrel (2) from vise. Clamp top sub (1) in vise.

K-4.1) Install o-ring (36) and quad seal (24) in grooves in seal retainer (28).

K-4.2) Screw seal retainer (28) onto seal receptacle (9).

CAUTION8: Do not rip or tear o-ring during installation.

K) ASSEMBLY (cont’d)

K-4.3) Screw central body (10) onto hold down body (5).

CAUTION$_8$: Do not rip or tear o-rings during installation.

K-4.4) Install o-ring (36) in groove in valve body (29).

K-4.5) Screw valve body (29) into central body (10).

K-4.6) Assemble rubber mandrel assembly and install:

K-4.6.1) Install rubber retainer (15), elements (13, 14), and rubber spacers (12) onto rubber mandrel (11).

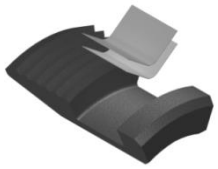

Fig. 6

K-4.7) Screw rubber mandrel (11) into valve body (29).

CAUTION$_8$: Do not rip or tear o-ring during installation

K-4.8) Screw lower cone (16) into rubber retainer (15).

K-4.9) Assemble drag block body assembly and install:

K-4.9.1) Install lower slips (17) and lower slip springs (25) into drag block body (18). Wedge lower slips (17) outward (if needed).

NOTE$_9$: Uses two (2ea) springs per slip (Fig. 6).

K-4.9.2) Install drag blocks (22) and drag block springs (3) in drag block body (18). Compress drag blocks (22) with drag block assembly tool (T1).

NOTE$_{10}$: Uses four (4ea) springs per drag block (Fig. 7).

K-4.9.3) Install strap retainer (6) onto drag block body (18) capturing ends of drag blocks (22).

K-4.9.4) Install drag block body assembly onto rubber mandrel (11)

Fig. 7

K-4.10) Screw rubber mandrel cap (19) onto rubber mandrel (11).

NOTE$_4$: For added leverage, insert a rod through rubber retainer (15) and rubber mandrel (11).

K-4.11) Screw J-body (20) onto drag block body (18) (**NOTE$_2$**: Left-hand threads).

NOTE$_3$: Drag block body assembly must be free to rotate.

K-4.12) Screw set screws (31) into J-body (20). Release drag blocks (22).

K-4.13) Install o-ring (34) in groove in J-pin bottom sub (23).

K-4.14) Screw J-pin bottom sub (23) onto mandrel (2).

CAUTION$_8$: Do not rip or tear o-ring during installation.

K-4.15) Screw set screws (30) into J-pin bottom sub (23). Move J-body (20) and drag block body assembly as needed to access threaded holes.

K-5) Unclamp top sub (1) from vise and remove assembled tool.

L) PARTS LIST

ITEM	QTY	DESCRIPTION	MATERIAL	P/N 61350RS
1	1	TOP SUB	DLMS110	61345615
2	1	MANDREL	DLMS110	61345215
3	20	DRAG BLOCK SPRING	-	9100900
4	1	HOLD DOWN CAP	DLMS110	61350370
5	1	HOLD DOWN BODY	DLMS110	61345321
6	3	STRAP RETAINER	DLMS80	61350650

L) PARTS LIST (cont’d)

ITEM	QTY	DESCRIPTION	MATERIAL	P/N 61350RS
7	1	COMPENSATING MANDREL	DLMS110	61345240
8	1	COMPENSATING PISTON	DLMS110	61345710
9	1	SEAL RECEPTACLE	DLMS110	61345730
10	1	CENTRAL BODY	DLMS110	61345381
11	1	RUBBER MANDREL	DLMS110	61345220
12	2	RUBBER SPACER	DLMS35	60250840
13	1	ELEMENT	80 DURO NITRILE	60250512
14	2	ELEMENT	90 DURO NITRILE	60250513
15	1	RUBBER RETAINER	DLMS60	60250850
16	1	LOWER CONE	DLMS110	60045420HT
17	4	CARBIDE LOWER SLIP	DLMS110	60050135C
18	1	DRAG BLOCK BODY	DLMS110	61350335
19	1	RUBBER MANDREL CAP	DLMS110	61345230
20	1	J-BODY	DLMS110	61350340
21	16	HOLD DOWN BUTTON SPRING	-	61345975
22	5	570 CARBIDE DRAG BLOCK	DLMSDB4	9057900C
23	1	BOTTOM SUB	DLMS110	61345635
24	1	QUAD SEAL	90 DURO NITRILE	61345520
25	8	LOWER SLIP SPRING	-	7145901
26	8	BUTTON	DLMSSP	61350140C
27	4	HOLD DOWN STRAP	DLMSFB4	61345360
28	1	SEAL RETAINER	DLMS110	61345530
29	1	VALVE BODY WELDMENT	DLMS110 / DLMS60	61350350
30	7	3/8-16 UNC X 3/8 SOCKET SET SCREW	STEEL	SSS037C037
31	4	1/4-20 UNC X 3/8 SOCKET SET SCREW	STEEL	SSS025C037
32	4	#10-24 UNC X 1/2 FLAT HEAD SOCKET CAP SCREW	STEEL	FHSC1024C050
33	8	125 O-RING	90 DURO NITRILE	90125
34	1	228 O-RING	90 DURO NITRILE	90228
35	1	230 O-RING	90 DURO NITRILE	90230
36	2	231 O-RING	90 DURO NITRILE	90231
37	2	232 O-RING	90 DURO NITRILE	90232
38	1	234 O-RING	90 DURO NITRILE	90234
39	1	235 O-RING	90 DURO NITRILE	90235
40	1	236 O-RING	90 DURO NITRILE	90236
41	1	333 O-RING	90 DURO NITRILE	90333

REDRESS KIT (RDK)		61350050
ASSEMBLED WEIGHT		110 LBS

L) PARTS LIST (cont’d)

L-1) ELASTOMER TRIM OPTIONS

NOTE$_{11}$: For temperature range, refer to Elastomer Trim Temperature Guide.

L-1.1) HSN

ITEM	QTY	DESCRIPTION	MATERIAL	P/N 61350RSH
13	1	ELEMENT	80 DURO HSN	60250512H
14	2	ELEMENT	90 DURO HSN	60250513H
24	1	QUAD SEAL	90 DURO HSN	61345520H
33	8	125 O-RING	90 DURO HSN	90125H
34	1	228 O-RING	90 DURO HSN	90228H
35	1	230 O-RING	90 DURO HSN	90230H
36	2	231 O-RING	90 DURO HSN	90231H
37	2	232 O-RING	90 DURO HSN	90232H
38	1	234 O-RING	90 DURO HSN	90234H
39	1	235 O-RING	90 DURO HSN	90235H
40	1	236 O-RING	90 DURO HSN	90236H
41	1	333 O-RING	90 DURO HSN	90333H

REDRESS KIT (RDK)		61350050H

L-1.2) VITON

ITEM	QTY	DESCRIPTION	MATERIAL	P/N 61350RSV
13	1	ELEMENT	80 DURO VITON	60250512V
14	2	ELEMENT	90 DURO VITON	60250513V
24	1	QUAD SEAL	90 DURO VITON	61345520V
33	8	125 O-RING	90 DURO VITON	90125V
34	1	228 O-RING	90 DURO VITON	90228V
35	1	230 O-RING	90 DURO VITON	90230V
36	2	231 O-RING	90 DURO VITON	90231V
37	2	232 O-RING	90 DURO VITON	90232V
38	1	234 O-RING	90 DURO VITON	90234V
39	1	235 O-RING	90 DURO VITON	90235V
40	1	236 O-RING	90 DURO VITON	90236V
41	1	333 O-RING	90 DURO VITON	90333V

REDRESS KIT (RDK)		61350050V

M) TECHNICAL ILLUSTRATION

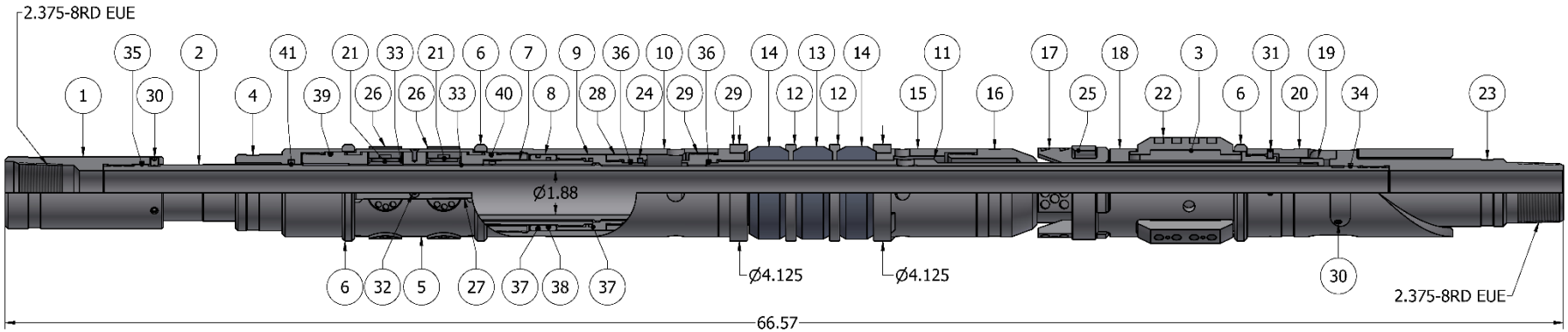

N) REVISION HISTORY

DATE	REVISION	DESCRIPTION OF CHANGES	REVISED BY	APPROVED BY
09/18/2023	N	Removed P/N 61352RS from manual and revised as needed	J.Anderson	E.Visaez
10/13/2021	M	Revised 9057900C was 9056900C, casing weight range for 61350RS	J.Anderson	D.McKeon
11/06/2020	L	Revised Specification Guide to include 5-1/2” casing for P/N 61350RS; Added spring inspection recommendation	J.Anderson	K.Plunkett
02/06/2020	K	Revised max. tensile load thru tool and hanging weight from set packer; Added General Screw Torque Recommendations	J.Anderson	D.Hushbeck
12/07/2015	J	Revised: Elastomer Durometer Temperatures – Nitrile (90/80/90 Duro) was 250° - 300°F, Nitrile (Contact D&L Sales) was 300°F +, Rubber Type Temperature Ranges – Nitrile was 70° - 300°F, HSN was 70° - 325°F; Removed: Drift ID	B.Mathis	B.Oligschlaeger
08/04/2015	H	Revised: tool maximum torque was 600 ft-lbs	J.Anderson	D.Hushbeck
06/25/2015	G	Added: tool drift ID, tool max. hanging weight, Pre-Installation Inspection Procedures, Storage Recommendations, P/N FHSC1024C037; Revised: Pressure Affected Area Guide	J.Anderson	J.McArthur
09/19/13	F	Revised: title header, assembled weights; Added: 5-12” option for P/N 61350RS, HSN and Viton options, recommended hand tools, button removal tool	J.Anderson	H.Bringham