A) DESCRIPTION

The Trilobite Hydro Anchor is a hydraulically-activated retrievable anchor designed to hold the tubing string in tension or compression. The Trilobite Hydro Anchor catcher prevents movement of the tubing during pumping strokes and holds it stationary if it should part. The use of a tubing anchor increases pump efficiency, reduces rod and tubing wear, and keeps tubing and rods from falling into the well in case of a part.

The Trilobite Hydro Anchor is operated by applying pressure to the tubing. This pressure shears screws that hold the anchor unset. A setting piston drives the slips set while locking the setting force in place. The Trilobite Hydro Anchor utilizes special designed slips - heat-treated steel alloy double-acting slips for maximum holding power in tension or compression. Slips are fully enclosed for extra breakage resistance and will be retained if slips break. The Trilobite Hydro Anchor is retrieved by shearing screws with tension. Shear pins are added in 5,000 lb increments to achieve the desired shear value necessary to release.

The Trilobite Hydro Anchor features a bypass area around the slips. The bypass allows gas and debris to pass the anchor as well as electrical and injection lines to be run alongside the anchor. The reduced O.D. is equivalent to a 3-1/2” EUE coupling.

NOTE1: When banding lines to the anchor, band only to the top sub. Banding to any other part will restrict movement and cause the tool to malfunction.

B) RELATED TOOLS (sold separately)

B-1) Pump-Out Plug (P/N varies)—refer to technical manual *DL-597-0000-431*.

C) SPECIFICATION GUIDE

CASING			TOOL			THREAD CONNECTION BOX UP / PIN DOWN	PART NUMBER
SIZE (INCHES)	**WEIGHT** (LBS/FT)	**RECOMMENDED HOLE SIZE** (INCHES)	**MAX OD** (INCHES)	**REDUCED OD** (INCHES)	**ID** (INCHES)		
7	17.0 – 26.0	6.276 – 6.538	6.000	4.500	3.00	3-1/2 EUE	31974C 31974HC[1] 31974VC[2]

Elastomer Trim Options: [1]HSN, [2]Viton

DIFFERENTIAL PRESSURE (MAX)	TENSILE LOAD THRU TOOL (MAX)	TORQUE THRU TOOL (MAX)
7,000 PSI	113,500 LBS	2,000 FT-LBS

D) PRE-INSTALLATION INSPECTION PROCEDURES

CAUTION1: D&L ships tool connections made-up **HAND TIGHT**—labeled with hand-tight tape on the tool (Fig. 1)—unless stated otherwise. Tighten/torque all connections properly before operating tool.

Fig. 1

GENERAL THREAD CONNECTION TORQUE RECOMMENDATIONS			
STUB ACME / ACME THREADS	**INTERNAL TAPERED TUBING THREADS**		**PREMIUM THREADS**
	UP TO 2-3/8”	**GREATER THAN 2-3/8”**	
600 – 800 FT-LBS	600 – 800 FT-LBS	800 – 1,200 FT-LBS	Consult thread manufacturer’s recommendations.

GENERAL SCREW TORQUE RECOMMENDATIONS									
SCREW SIZE (INCHES)	#6	#8	#10	1/4	5/16	3/8	7/16	1/2	5/8 and larger
TORQUE RANGE (INCH-POUNDS)	5 – 8	10 – 15	18 – 25	25 – 40	50 – 80	90 – 135	160 – 210	250 – 330	450 - 650

Before first use, D&L recommends disassembly and inspection of the tool unless stated otherwise. Ensure parts have not been damaged during shipping. Replace damaged parts with D&L replacement parts. Contact D&L sales for replacement part information.

Re-assemble the tool after inspection. Install parts in the correct order and orientation. Properly tighten connections.

Before re-using the tool, D&L recommends disassembly and inspection of the tool. Clean parts and ensure parts are in good working condition. Replace worn or damaged parts with D&L replacement parts.

When redressing the tool, D&L recommends replacement of all seals, o-rings, shear screws, etc. Contact D&L sales for redress kit and/or other replacement part information.

E) SETTING PROCEDURES

CAUTION2: Do not run the tool without properly tightening connections. Running the tool with loose connections may damage the tool and cause malfunction.

The Trilobite Hydro Anchor is operated by applying pressure to the tubing. The applied pressure shears the setting shear screws which set the anchor. The setting piston sets the slips set while locking the setting force in place.

A tubing plug (ball seat, pump-out plug, etc.) must be run below the anchor so pressure can be applied to the tubing. The initial setting pressure is controlled by shear screws in the setting piston. The shear screws are rated to 806 psi/screw and the pressure to initiate setting will be determined by the quantity of shear screws.

Once on bottom, pressure tubing to the recommended setting pressure of 3,225 psi to fully set anchor when all four (4 qty) setting shear screws are used.

F) RELEASING PROCEDURES

A straight pull shears the releasing shear screws with tension and the anchor can be retrieved. The anchor must be re-dressed before it can be reset. Shear screws are added in 5,000 lb increments to achieve the desired shear value necessary to release the anchor.

G) SETTING FORCE GUIDE

SIZE (INCHES)	**MINIMUM FORCE REQUIRED ON ANCHOR**		**SETTING AREA** (SQ INCHES)	**RECOMMENDED SETTING FORCE**	
7	6,500 LBS	2,207 PSI	2.945	9,500 LBS	3,225 PSI

H) ELASTOMER TRIM TEMPERATURE GUIDE

RUBBER TYPE	TEMPERATURE RANGE
NITRILE	40° - 250°F
HSN (HNBR)	70° - 300°F
VITON	100° - 350°F

I) STORAGE RECOMMENDATIONS

When preparing the tool for storage, follow the Pre-Installation Inspection Procedures. Re-assemble the tool with connections hand-tight only and in running position if applicable.

Store the tool, if possible, in an enclosed, temperature and humidity controlled environment. Avoid excessively high temperatures over long periods of time. Keep tool dry and protected from condensation. Do not store in contact with or near volatile or corrosive chemicals. Do not store near ozone generating equipment or operations such as welding.

J) RECOMMENDED HAND TOOLS

- VISE
- GLOVES
- ALLEN WRENCHES
- TAPE MEASURE
- O-RING PICK
- BAR
  - 1/2-INCH
  - 3/4-INCH
- PAINT BRUSH, 2-INCH
- PIPE WRENCH, 3-FT (2 EA)
- “CHEATER” PIPE, 4-FT LONG
- ADJUSTABLE WRENCH, 12-INCH
- CORDLESS DRILL, 18V
- SNAP RING SPREADER PLIERS
- ALIGNING PUNCH
- SCREWDRIVER SET, FLAT-TIPPED
- SOCKET SETS
  - 3/8-INCH DRIVE
  - 1/2-INCH DRIVE
- HAMMERS
  - SLEDGE
  - BALL PEEN
  - DEAD BLOW

K) DISASSEMBLY

K-1) Clamp lower end of mandrel (2) in vise.

K-1.1) From lower end of tool, unscrew and remove shear screws (12) from support sleeve (8).

K-1.2) Unscrew and remove button head cap screws (15) from cone blocks (7).

K-1.3) Lift cone blocks (7) and slips (10) outward. Align threaded holes in cone blocks (7) with holes in slip body (9).

K-1.4) Temporarily screw cap screws (19) into cone blocks (7) to hold slips (10) outward during disassembly.

K-1.5) From upper end of tool, unscrew and remove top sub (1) from mandrel (2).

K-1.6) Unscrew and remove shear screws (11) from setting chamber (3).

K-1.7) Remove setting chamber (3) from setting piston (6) and mandrel (2).

K-1.7.1) Remove o-ring (17) from setting chamber (3).

K-1.8) Remove stop ring (4) from mandrel (2).

K-1.9) Unscrew and remove brass screw (14) from setting piston (6).

K-1.10) Unscrew setting piston (6) downward from lock ring (5).

NOTE$_2$: Slip body assembly must be free to rotate.

K-1.11) Unscrew and remove lock ring (5) from mandrel (2) (**NOTE$_3$**: Left-hand threads).

NOTE$_4$: Using snap ring spreader pliers, lock ring may be spread slightly to be removed from mandrel.

K) DISASSEMBLY (cont’d)

K-1.12) Remove setting piston (6) from slip body (9) and mandrel (2).

K-1.12.1) Remove o-rings (17, 18) from setting piston (6).

K-1.13) Remove slip body assembly from mandrel (2) and disassemble:

K-1.13.1) Unscrew and remove cap screws (19) from cone blocks (7).

K-1.13.2) Remove cone blocks (7) and slips (10) from slip body (9).

K-1.13.3) Unscrew and remove button head cap screws (13) from slips (10) and remove slip springs (16).

K-1.14) Remove support sleeve (8) from mandrel (2).

NOTE$_8$: If needed, remove mandrel (2) from vise and stand on upper end. Slide support sleeve (8) downward off shear screw shoulder of mandrel (2) to remove.

K-2) Unclamp and remove mandrel (2) from vise.

L) ASSEMBLY

NOTE$_5$: Clean and inspect all parts. Replace all worn and damaged parts. Install parts in proper order and orientation.

L-1) Clamp lower end of mandrel (2) in vise.

L-1.1) Install support sleeve (8) onto mandrel (2).

L-1.2) Assemble slip body assembly and install:

L-1.2.1) Position slip springs (16) on slips (10).

NOTE$_6$: Uses two (2 ea) springs per slip (Fig. 2).

L-1.2.2) Secure slip springs (16) by screwing button head screws (13) into slips (9) (Fig. 2).

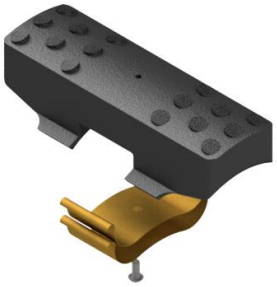

Fig. 2

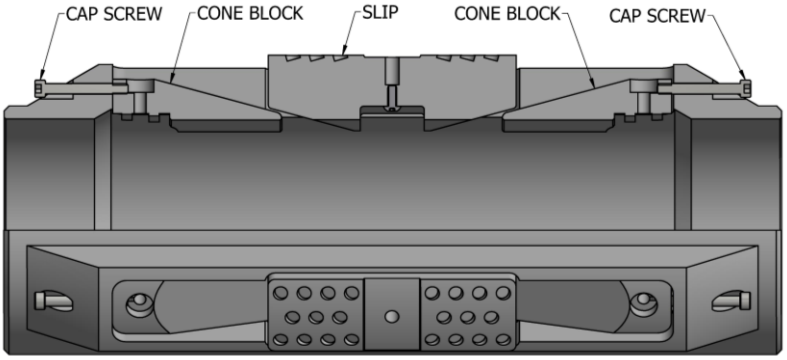

Fig. 3
for illustration only. Not representative of actual tool.

L-1.2.3) Install lower cone blocks (7) into slip body (9). Align threaded holes in cone blocks (7) with holes in slip body (9) (Fig. 3).

L-1.2.4) Screw cap screws (19) into lower cone blocks (7) (Fig. 3).

L-1.2.5) Install slips (10) and upper cone blocks (7) into slip body (9) one at a time (Fig. 3).

L-1.2.6) For each slip (10), press slip (10) and upper cone block (7) outwards to align threaded hole in cone block (7) with hole in slip body (9). Screw cap screw (19) into cone block (7)

L-1.2.7) Install slip body assembly onto mandrel (2). Align cone blocks (7) with flats on upper end of support sleeve (8). Align holes in cone blocks (7) with threaded holes in support sleeve (8).

L-1.2.8) Unscrew and remove cap screws (29) from lower cone blocks (7). Ensure lower cone blocks (7) are mated with grooves in support sleeve (8). Screw button head cap screws (15) into support sleeve (8).

L) ASSEMBLY (cont’d)

L-1.3) Install o-rings (17, 18) in o-ring grooves in setting piston (6).

L-1.4) Install setting piston (6) onto mandrel (2). Align flats in lower end of setting piston (6) with upper cone blocks (7). Align threaded holes in setting piston (6) with holes in cone blocks (7).

L-1.5) Unscrew and remove cap screws (29) from cone blocks (7). Ensure cone blocks (7) are mated with grooves in setting piston (6). Screw button head cap screws (15) into setting piston (6).

L-1.6) Screw and/or slide lock ring (5) onto the upper end of ratchet threads on mandrel (2) (**NOTE$_3$**: Left-hand threads).

NOTE$_7$: Threads on lock ring (5) are directional and must be installed in correct direction for tool to work properly (Fig. 4).

NOTE$_4$: Using snap ring spreader pliers, lock ring (5) may be spread slightly to be installed onto mandrel.

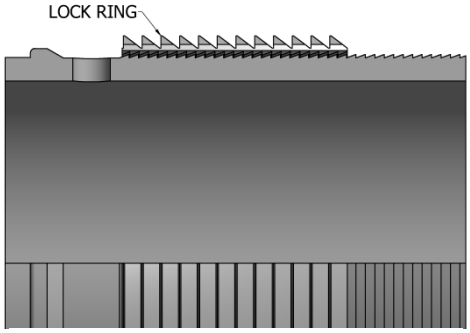

Fig. 4

L-1.7) Carefully screw setting piston (6) onto lock ring (5). Align threaded hole in upper end of setting piston (6) with gap in lock ring (5).

L-1.8) Screw brass screw (14) into setting piston (6) until screw (14) is flush with O.D. of setting piston (6).

CAUTION$_3$: Do not overtighten brass screw (14). Overtightening may result in damage to the ratchet thread.

L-1.9) Install stop ring (4) in groove in upper end of mandrel (2).

L-1.10) Moving to lower end of tool, align threaded holes in support sleeve (8) with counterbore holes in mandrel (2).

L-1.11) Screw shear screws (12) into support sleeve (8). Tighten until shear screws (12) make contact with mandrel (2). Back shear screws (12) out 1/4 turn. .

L-1.12) Install o-ring (17) in o-ring groove in setting chamber (3).

L-1.13) Moving to upper end of tool, carefully install setting chamber (3) onto setting piston (6) and onto mandrel (2). Align threaded holes in setting chamber (3) with counterbore holes in setting piston (6).

NOTE$_8$: Backup on setting piston (6) with wrench to prevent setting lock ring (5) from ratcheting downwards while installing setting chamber (3).

CAUTION$_4$: Do not rip or tear o-ring during installation.

L-1.14) Screw shear screws (11) into setting chamber (3). Tighten until shear screws (11) make contact with setting piston (6). Back shear screws (11) out 1/4 turn.

L-1.15) Screw top sub (1) onto upper mandrel (2).

L-2) Unclamp mandrel (2) from vise and remove assembled tool.

M) PARTS LIST

ITEM	QTY	DESCRIPTION	MATERIAL	P/N 31974C
1	1	TOP SUB	DLMS80	31973610
2	1	INNER MANDREL	DLMS80	31973210
3	1	SETTING CHAMBER	DLMS110	31973750
4	1	STOP RING	DLMS110	31973980

M) PARTS LIST (cont’d)

ITEM	QTY	DESCRIPTION	MATERIAL	P/N 31974C
5	1	LOCK RING	DLMS41X80	31973011
6	1	SETTING PISTON	DLMS110	31973741
7	6	CONE BLOCK	DLMS110	31973411
8	1	SUPPORT SLEEVE	DLMS110	31973931
9	1	SLIP BODY	DLMS110	31974320
10	3	SLIP W/ CARBIDE	DLMS110	31974110C
11	4	SHEAR SCREW (2375#)	DLM360BRS	90555990
12	12	SHEAR SCREW (5000#)	DLM360BRS	32045910
13	3	BUTTON HEAD CAP SCREW #8-32 UNC X 3/8	STEEL	BHSC832C037
14	1	SHEAR SCREW (750#) #10-32 UNF X 1/4	DLM360BRS	BSSSLT1032F025
15	6	BUTTON HEAD CAP SCREW #10-32 UNF X 1/2	STEEL	BHSC1032F050
16	6	SLIP SPRING	-	72470950
17	2	238 O-RING	90 DURO NITRILE	90238
18	1	240 O-RING	90 DURO NITRILE	90240
19	6	CAP SCREW #10-24 UNC X 1-1/2	STEEL	SCS1024C150*

*Cap screws used for assembly purposes only.

REDRESS KIT (RDK)		31974050
ASSEMBLED WEIGHT		88 LBS

M-1) ELASTOMER TRIM OPTIONS

NOTE9: For temperature range, refer to Elastomer Trim Temperature Guide.

M-1.1) HSN

ITEM	QTY	DESCRIPTION	MATERIAL	P/N 31974HC
17	2	238 O-RING	90 DURO HSN	90238H
18	1	240 O-RING	90 DURO HSN	90240H

REDRESS KIT (RDK)		31974050H

M-1.2) VITON

ITEM	QTY	DESCRIPTION	MATERIAL	P/N 31974VC
17	2	238 O-RING	90 DURO VITON	90238V
18	1	240 O-RING	90 DURO VITON	90240V

REDRESS KIT (RDK)		31974050V

N) TECHNICAL ILLUSTRATION

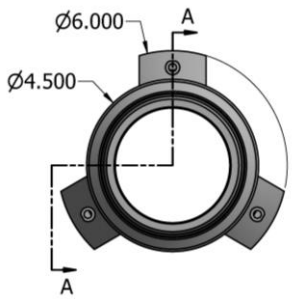

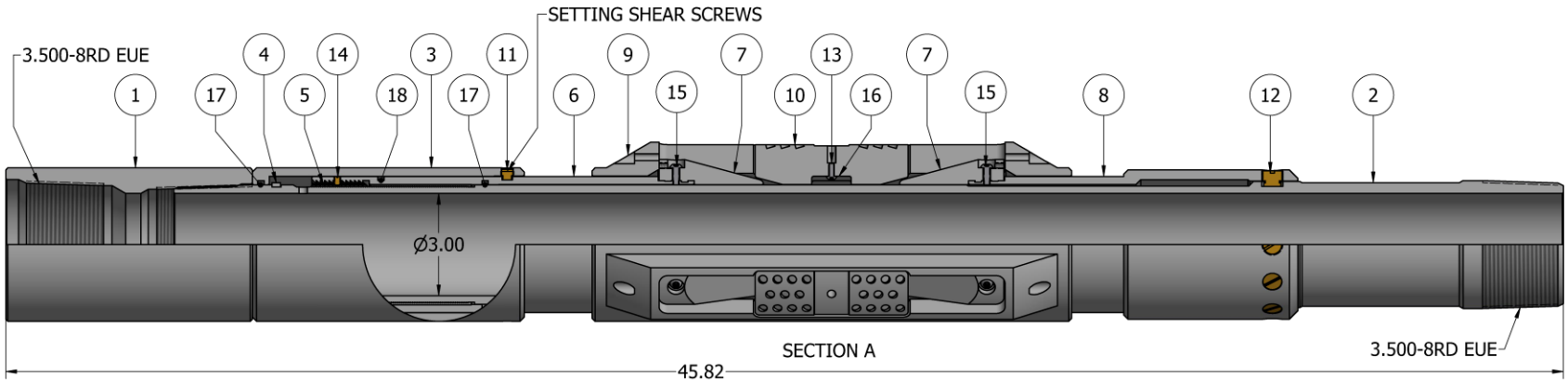

O) REVISION HISTORY

DATE	REVISION	DESCRIPTION OF CHANGES	REVISED BY	APPROVED BY
01/05/2023	C	Revised P/N 31973741 was 31973740, 31973411 was 31973410, 31973931 was 31973930	J.Anderson	E.Visaez
04/24/2019	B	Revised BHSC1032F050 was FHSC1032F050	J.Anderson	J.Johnson
08/07/2018	A	Created new manual	-	-