A) DESCRIPTION

The Type T Squeeze Packer is a versatile, easy to use tension set tool which holds differential pressure from above or below. This packer is designed to run, set, reset and retrieve easily, even under adverse conditions. This packer can be set at any depth and is used when insufficient weight is available to set a compression packer. This packer is ideal for squeeze cementing, casing testing, stimulation treatments and straddle operations using a retrievable bridge plug.

An SC Tension Unloader is generally run above this packer allowing pressure equalization before release. The SC Tension Unloader also provides a by-pass when running and retrieving to minimize swabbing of the elements.

This packer features a full bore that minimizes the potential for screening out during fracturing, does not restrict the flow rates and allows the use of through-tubing tools without pulling the packer.

This packer also features an emergency release system that uses a high-ratio left-hand thread. Applying right-hand rotation of the tubing relaxes the packing elements and moves the lower cone well away from the slips allowing the slips to fully retract.

B) RELATED TOOLS (sold separately)

B-1) 2-7/8” SC Tension Unloader (P/N 52525)—refer to technical manual *DL-525-2875-680.*

C) SPECIFICATION GUIDE

CASING			TOOL			THREAD CONNECTION BOX UP / PIN DOWN	PART NUMBER
SIZE (INCHES)	**WEIGHT** (LBS/FT)	**RECOMMENDED HOLE SIZE** (INCHES)	**GAGE OD** (INCHES)	**NOMINAL ID** (INCHES)	**DRIFT ID** (INCHES)		
7-5/8	24.0 – 29.7	6.875 – 7.025	6.672	2.50	2.347	2-7/8 EUE	62175RM 62175RMH[1] 62175RMV[2]
	33.7 – 39.0	6.625 – 6.765	6.453	2.50	2.347	2-7/8 EUE	62177RM 62177RMH[1] 62177RMV[2]

[1]HSN Option [2]Viton Option

NOTE$_1$: Tools listed are right-hand manual set.

DIFFERENTIAL PRESSURE (MAX)	TENSILE LOAD THRU TOOL (MAX)
8,000 PSI	175,000 LBS

D) PRE-INSTALLATION INSPECTION PROCEDURES

CAUTION$_1$: D&L ships tool connections made-up **HAND TIGHT**—labeled with hand-tight tape on the tool (Fig. 1)—unless stated otherwise. Tighten/torque all connections properly before operating tool.

Fig. 1

GENERAL THREAD CONNECTION TORQUE RECOMMENDATIONS			
STUB ACME / ACME THREADS	**INTERNAL TAPERED TUBING THREADS**		**PREMIUM THREADS**
	UP TO 2-3/8”	**GREATER THAN 2-3/8”**	
600 – 800 FT-LBS	600 – 800 FT-LBS	800 – 1,200 FT-LBS	Consult thread manufacturer’s recommendations.

Before first use, D&L recommends disassembly and inspection of the tool unless stated otherwise. Ensure parts have not been damaged during shipping. Replace damaged parts with D&L replacement parts. Contact D&L sales for replacement part information.

Re-assemble the tool after inspection. Install parts in the correct order and orientation. Properly tighten connections.

Before re-using the tool, D&L recommends disassembly and inspection of the tool. Clean parts and ensure parts are in good working condition. Replace worn or damaged parts with D&L replacement parts.

When redressing the tool, D&L recommends replacement of all seals, elements, o-rings, shear screws, etc. Contact D&L sales for redress kit and/or other replacement part information.

E) OPERATION

NOTE$_2$: Always run a D& L SC Unloader above the T-Squeeze Packer if pressure equalization is required.

NOTE$_3$: When using a tubing tester, it must be run **above** the SC Unloader.

CAUTION$_2$: Do not run the tool without properly tightening connections. Running the tool with loose connections may damage the tool and cause malfunction.

E-1) SETTING PROCEDURES

The SC Unloader is usually run above the T-Squeeze Packer. When the packer is run in, the unloader is open allowing the circulation of well fluids through and around the tool. To set the packer, pick up and rotate 1/3 turn to the right (or left if left-hand set) at the packer. Hold torque and slack off tubing weight. The packing elements are not yet compressed, so circulation around the tool can be maintained. Tension is then pulled to compress the elements and close the unloader (see chart for recommended setting forces). Factors such as pressure and temperature (which can shorten or elongate the tubing) should be carefully considered when determining the amount of tension to be applied.

CAUTION$_3$: When running the T-Squeeze Packer with a Retrievable Bridge Plug, make sure the retrieving tool J-slots are compatible with the packer.

E-2) RELEASING PROCEDURES

Set down tubing weight to open the unloader and equalize pressure. Pick up while holding left-hand torque to move the J-pin into the running position. The packer is now free to be moved and re-set or retrieved.

E) OPERATION (cont’d)

E-3) SAFETY RELEASE PROCEDURE

In the event the packer cannot be released in the normal manner, rotation of the tubing to the right will force the slips to release and the packing elements to relax. This is accomplished through the left-hand jacking thread connection between the upper mandrel and central coupling. Right-hand rotation at the tool jacks the mandrel up, equalizing the pressure across the tubing, until it hits the jack nut. Continued rotation will jack the lower mandrel down forcing the lower cone away from the slips and the rubber retainer away from the packed off elements. At this point the packer may be pulled out of the well or by re-jaying and then rotating to the left until the jacking thread returns to its original position. The packer may then be re-set.

NOTE$_4$: The quantity of turns it takes to release the packer is variable, depending on the casing weight and the tension originally pulled to set the packer. Contact D&L Oil Tools for the correct quantity of turns.

F) SETTING FORCE GUIDE

SIZE (INCHES)	**MINIMUM FORCE REQUIRED AT PACKER**
7-5/8 X 2-7/8	16,000 LBS

G) STORAGE PROCEDURES

When preparing the tool for storage, follow the Pre-Installation Inspection Procedures. Re-assemble the tool with connections hand-tight only and in running position if applicable. Elements should be in a relaxed state—free from tension, compression, and other stresses that could cause deformation.

Store the tool, if possible, in an enclosed, temperature and humidity controlled environment. Avoid excessively high temperatures over long periods of time. Shield elastomeric parts from ultraviolet light sources. Keep tool dry and protected from condensation. Do not store in contact with or near volatile or corrosive chemicals. Do not store near ozone generating equipment or operations such as welding.

H) RECOMMENDED TOOLS

H-1) HAND TOOLS

- VISE
- GLOVES
- ALLEN WRENCHES
- TAPE MEASURE
- O-RING PICK
- BAR
  - 1/2-INCH
  - 3/4-INCH
- PAINT BRUSH, 2-INCH
- PIPE WRENCH, 3-FT (2 EA)
- “CHEATER” PIPE, 4-FT LONG
- ADJUSTABLE WRENCH, 12-INCH
- CORDLESS DRILL, 18V
- SNAP RING SPREADER PLIERS
- ALIGNING PUNCH
- SCREWDRIVER SET, FLAT-TIPPED
- SOCKET SETS
  - 3/8-INCH DRIVE
  - 1/2-INCH DRIVE
- HAMMERS
  - SLEDGE
  - BALL PEEN
  - DEAD BLOW

H-2) SPECIAL TOOLS

ITEM	QTY	DESCRIPTION	PART NUMBER
T1	1	DRAG BLOCK ASSEMBLY TOOL	AT070110

I) DISASSEMBLY

I-1) Clamp J-body (20) in vise.

I-1.1) Unscrew and remove bottom sub assembly from lower mandrel (5) and disassemble:

I-1.1.1) Unscrew and separate rubber retainer (15) from bottom sub (19).

I-1.1.2) Remove o-ring (26) from groove in bottom sub (19).

I-1.1.3) Remove o-ring (25) from groove in rubber retainer (15).

I-1.2) Remove elements (13, 14) and rubber spacers (12) from rubber mandrel (11).

I-1.3) Unscrew and remove rubber mandrel (11) from lower cone (16).

I-1.4) Remove lower cone (16) from lower mandrel (5).

I-1.4.1) Remove o-rings (24) from lower cone (16).

I-2) Rotate and slide inner tool components into set position (Fig. 2).

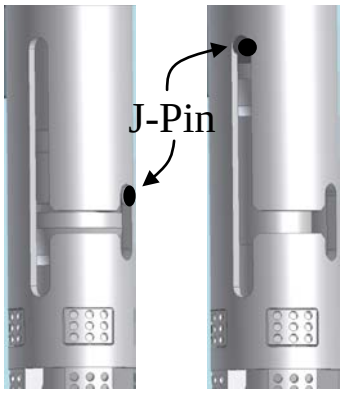

Run/Retrieve Position — Set Position

Fig. 2

I-2.1) Moving to upper end of tool, unscrew and remove coupling (1) from upper mandrel (2).

I-2.2) Unscrew drag block body assembly from J-body (20). Remove drag block body assembly and disassemble:

I-2.2.1) Compress drag blocks (22) with drag block assembly tool (T1).

I-2.2.2) Unscrew and remove lower drag block retainer (21).

I-2.2.3) Release drag blocks. Remove drag blocks (22) and drag block springs (3).

I-2.2.4) Unscrew and remove jack nut (4) from drag block body (18).

I-2.3) Unscrew and remove upper mandrel (2) from center coupling (10) (**NOTE$_5$**: Left-hand threads.)

I-2.4) Unscrew and remove center coupling (10) from lower mandrel (5).

I-2.4.1) Remove o-rings (23) from grooves in center coupling (10).

I-2.5) Remove J-pin retainer (6) from J-body (20).

I-2.6) Remove removable J-pins (7) from lower mandrel (5) through J-slots in J-body (20). Move J-pins downwards in J-slots as necessary to be removed.

I-2.7) Wedge slips (17) outwards (if necessary). Remove lower mandrel (5) from lower end of J-body (20).

I-2.7.1) Remove upper cone (9) from lower mandrel (5).

I-2.8) Remove wedges (if necessary). Remove slips (17) and slip springs (8) from J-body (20).

I-3) Unclamp and remove J-body (20) from vise.

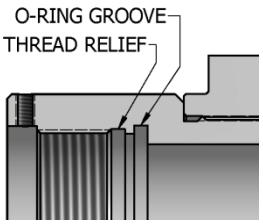

Fig. 3

J) ASSEMBLY

NOTE$_6$: Clean and inspect all parts. Replace all worn and damaged parts. Install parts in proper order, and orientation and tighten/torque all connections properly.

CAUTION$_4$: To ensure tool operates properly, install o-rings in o-ring grooves **<u>NOT</u>** thread reliefs (Fig. 3).

J-1) Clamp J-body (20) in vise.

J-1.1) Install slips (17) and slip springs (8) into J-body (20). Wedge slips outwards.

NOTE$_7$: Install two (2ea) springs per slip (Fig. 4).

J-1.2) Install upper cone (9) into upper end of lower mandrel (5).

Fig. 4

J) ASSEMBLY (cont’d)

J-1.3) Install lower mandrel (5) into J-body (20). Remove wedges.

J-1.4) Align recessed areas in lower mandrel (5) with slots in J-body (20) and install removable J-pins (7) through J-slots and place in recesses.

J-1.5) Slide lower mandrel (5) with removable J-pins (7) toward upper end of J-body (20).

J-1.6) Install J-pin retainer (6) into J-body (20) and align so removable J-pins (7) slip into notches.

J-1.7) Install o-rings (23) into grooves in center coupling (10).

J-1.8) Screw center coupling (10) onto lower mandrel (5).

CAUTION$_5$: Do NOT rip or tear o-ring during installation.

J-1.9) Screw upper mandrel (2) into center coupling (10) (**NOTE$_5$**: Left-hand threads).

CAUTION$_5$: Do NOT rip or tear o-ring during installation.

J-1.10) Assemble drag block body assembly and install:

J-1.10.1) Screw jack nut (4) into drag block body (18).

J-1.10.2) Install drag blocks (22) and drag block springs (3). Compress drag blocks (22) with drag block assembly tool (T1).

NOTE$_8$: Install six (6ea) springs per block (Fig. 5).

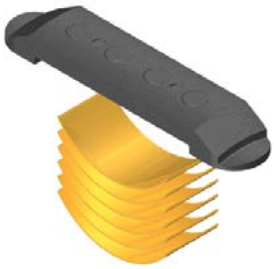

Fig. 5

J-1.10.3) Screw drag block retainer (21) onto drag block body (18) capturing ends of drag blocks (22). Release drag blocks.

J-1.10.4) Install drag block body assembly onto upper mandrel (2). Screw drag block body (18) into J-body (20).

J-1.11) Screw coupling (1) onto upper mandrel (2).

J-1.12) Rotate and slide inner tool components to move J-pins into run/retrieve position (Fig. 2).

J-1.13) Install o-rings (24) into grooves in lower cone (16).

J-1.14) Install lower cone (16) onto lower mandrel (5).

CAUTION$_5$: Do NOT rip or tear o-rings during installation.

NOTE$_9$: Additional force may be required to install upper cone onto lower mandrel.

J-1.15) Screw rubber mandrel (11) into lower cone (16).

J-1.16) Install elements (13, 14) and rubber spacers (12) onto rubber mandrel (11).

J-1.17) Assemble bottom sub assembly:

J-1.17.1) Install o-ring (26) into groove in bottom sub (19).

J-1.17.2) Install o-ring (25) into groove in rubber retainer (15).

J-1.17.3) Screw rubber retainer (15) onto bottom sub (19).

J-1.18) Screw bottom sub assembly onto lower mandrel (5).

J-2) Unclamp J-body (20) from vise and remove assembled tool.

K) PARTS LIST

ITEM	QTY	DESCRIPTION	MATERIAL	P/N 62175RM (24.0-29.7#)	P/N 62177RM (33.7-39.0#)
1	1	COUPLING	P-110	CP2875E2875EHT	
2	1	UPPER MANDREL	P-110	62070210	
3	36	DRAG BLOCK SPRING	INCONEL	9101900	
4	1	JACK NUT	P-110	62070950	
5	1	LOWER MANDREL	P-110	62070230	
6	1	J-PIN RETAINER	4130-4140	62070920	
7	2	REMOVABLE J-PIN	4140 HT	62070120	
8	8	SLIP SPRING	ELGILOY	7170901	
9	1	UPPER CONE	P-110	62070410	
10	1	CENTER COUPLING	P-110	62070620	
11	1	RUBBER MANDREL	P-110	62070220	
12	2	RUBBER SPACER	1018	60275840	60276840
13	1	ELEMENT	70 DURO NITRILE	60275511	60276511
14	2	ELEMENT	90 DURO NITRILE	60275513	60276513
15	1	RUBBER RETAINER	P-110	62176851	62177851
16	1	LOWER CONE	P-110	62176420	62177420
17	4	CARBIDE SLIP	P-110	62075111C	
18	1	DRAG BLOCK BODY	P-110	62070330	
19	1	BOTTOM SUB	P-110	62070630	
20	1	J-BODY	P-110 / 1026	62076340	62077340
21	1	DRAG BLOCK RETAINER	P-110	62076910	
22	6	DRAG BLOCK	4130	9090900C	
23	2	336 O-RING	90 DURO NITRILE	90336	
24	2	338 O-RING	90 DURO NITRILE	90338	
25	1	346 O-RING	90 DURO NITRILE	90346	
26	1	337 O-RING	90 DURO NITRILE	90337	

REDRESS KIT (RDK)		62175050	62177050
ASSEMBLED WEIGHT		249 LBS	244 LBS

L) OPTIONS PARTS LIST

L-1) HSN

NOTE$_{10}$: For temperature range, refer to Element Selection Guide.

ITEM	QTY	DESCRIPTION	MATERIAL	P/N 62175RMH (24.0-29.7#)	P/N 62177RMH (33.7-39.0#)
13	1	ELEMENT	70 DURO HSN	60275511H	60276511H
14	2	ELEMENT	90 DURO HSN	60275513H	60276513H
23	2	336 O-RING	90 DURO HSN	90336H	
24	2	338 O-RING	90 DURO HSN	90338H	
25	1	346 O-RING	90 DURO HSN	90346H	
26	1	337 O-RING	90 DURO HSN	90337H	

REDRESS KIT (RDK)		62175050H	62177050H

L-2) VITON

NOTE$_{10}$: For temperature range, refer to Element Selection Guide.

ITEM	QTY	DESCRIPTION	MATERIAL	P/N 62175RMV (24.0-29.7#)	P/N 62177RMV (33.7-39.0#)
13	1	ELEMENT	70 DURO VITON	60275511V	60276511V
14	2	ELEMENT	90 DURO VITON	60275513V	60276513V
23	2	336 O-RING	90 DURO VITON	90336V	
24	2	338 O-RING	90 DURO VITON	90338V	
25	1	346 O-RING	90 DURO VITON	90346V	
26	1	337 O-RING	90 DURO VITON	90337V	

REDRESS KIT (RDK)		62175050V	62177050V

M) PARTS LIST

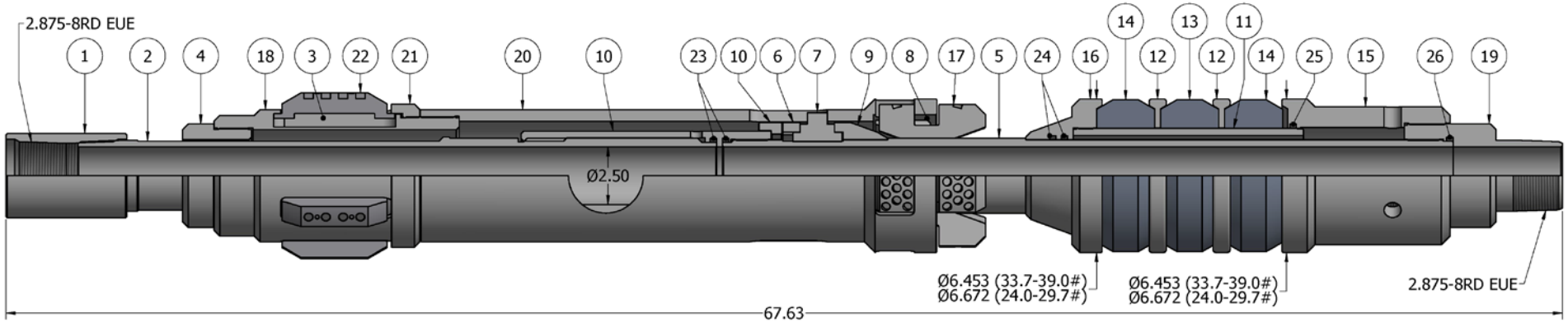
2.875-8RD EUE
1
2
4
18
3
22
21
20
10
23
10
6
7
9
8
17
5
24
16
14
12
13
12
11
14
25
15
26
19
Ø2.50
Ø6.453 (33.7-39.0#)
Ø6.672 (24.0-29.7#)
Ø6.453 (33.7-39.0#)
Ø6.672 (24.0-29.7#)
2.875-8RD EUE
67.63

N) REVISION HISTORY

DATE	REVISION	DESCRIPTION OF CHANGES	REVISED BY	APPROVED BY
08/14/14	C	Revised operating procedures, tech illustration; Added tool drift ID, HSN and Viton options, related tools, pre-installation inspection and storage procedures, recommended tools, redress kits;	J.Anderson	J.McArthur