A) DESCRIPTION

The DL Tension Packer and DL Shear Tension Packer are economical, compact tools for injection, pumping, medium range treating and production applications. These packers are set by 1/4 right-hand rotation of the tubing and then pull tension. To release these packers, slack off the tubing and the packer will automatically re-jay into the release position. These packers have a right-hand rotation release allowing retrieval of the tubing string.

The DL Tension Packer can be run in tension or compression. When the DL Tension Packer is run in compression, the right-hand release option cannot be utilized.

The DL Shear Tension Packer features an adjustable straight pull safety shear release. This packer is not designed to be run in compression.

NOTE$_1$: If a higher shear release is needed, the brass shear pins can be replaced with optional mild steel shear pins that shear at 6,000# per shear pin.

CAUTION$_1$: Prior to installing these optional shear pins, contact D&L Oil Tools for recommendation on maximum shear value allowed for tool.

B) SPECIFICATION GUIDE

CASING			TOOL		THREAD CONNECTION BOX UP / PIN DOWN	PART NUMBER
SIZE (INCHES)	**WEIGHT** (LBS/FT)	**RECOMMENDED HOLE SIZE** (INCHES)	**GAGE OD** (INCHES)	**NOMINAL ID** (INCHES)		
13-3/8	48.0 – 72.0	12.347 – 12.715	12.000	4.00	4-1/2 EUE	41213 41213H[1] 41213V[2]

Elastomer Trim Options: [1]HSN, [2]Viton

DIFFERENTIAL PRESSURE (MAX)	TENSILE LOAD THRU TOOL (MAX)
4,000 PSI	198,500 LBS

C) PRE-INSTALLATION INSPECTION PROCEDURES

CAUTION$_2$: D&L ships tool connections made-up **HAND TIGHT**—labeled with hand-tight tape on the tool (Fig. 1)—unless stated otherwise. Tighten/torque all connections properly before operating tool.

Fig. 1

GENERAL THREAD CONNECTION TORQUE RECOMMENDATIONS			
STUB ACME / ACME THREADS	**INTERNAL TAPERED TUBING THREADS**		**PREMIUM THREADS**
	UP TO 2-3/8”	**GREATER THAN 2-3/8”**	
600 – 800 FT-LBS	600 – 800 FT-LBS	800 – 1,200 FT-LBS	Consult thread manufacturer’s recommendations.

C) PRE-INSTALLATION INSPECTION PROCEDURES (cont’d)

GENERAL SCREW TORQUE RECOMMENDATIONS									
SCREW SIZE (INCHES)	#6	#8	#10	1/4	5/16	3/8	7/16	1/2	5/8 and larger
TORQUE RANGE (INCH-POUNDS)	5 – 8	10 – 15	18 – 25	25 – 40	50 – 80	90 – 135	160 – 210	250 – 330	450 - 650

Before first use, D&L recommends disassembly and inspection of the tool unless stated otherwise. Ensure parts have not been damaged during shipping. Replace damaged parts with D&L replacement parts. Contact D&L sales for replacement part information.

Re-assemble the tool after inspection. Install parts in the correct order and orientation. Properly tighten connections.

Before re-using the tool, D&L recommends disassembly and inspection of the tool. Clean parts and ensure parts are in good working condition. Replace worn or damaged parts with D&L replacement parts.

When redressing the tool, D&L recommends replacement of all seals, elements, o-rings, shear screws, etc. Contact D&L sales for redress kit and/or other replacement part information.

D) SETTING PROCEDURES

CAUTION$_3$: Do not run the tool without properly tightening connections. Running the tool with loose connections may damage the tool and cause malfunction.

Before running the packer, check the safety shear release to see that the proper quantities of shear pins are installed. Each pin shears at 4,000 lbs.

NOTE$_2$: Optional shear pins that shear at 6,000 lbs/pin are also available.

Run to setting depth. Set down the work string and rotate 1/4 turn to the right at the packer. Pull tension on the packer to set the slips and compress the packing elements. A minimum pull of 27,000 lbs at the packer is required to pack off the elements.

NOTE$_3$: Take care not to pull more than two-thirds (2/3) of the safety shear setting.

E) RELEASING PROCEDURES

Set down the work string to unset the slips, relax the packing elements and re-jay the packer. The packer may now be moved and reset, or pulled from the well.

E-1) EMERGENCY RELEASE

In the event the packer will not release in the normal manner, pull to shear the safety shear release. Once it shears, set down one to two feet (1’-2’) and pick up to ensure the packer is released. Trip out with the packer. If the safety shear release will not shear, torque the work string to the right until the secondary release threads break loose. Rotate 12-15 additional turns to the right at the tool and trip out.

F) STORAGE RECOMMENDATIONS

When preparing the tool for storage, follow the Pre-Installation Inspection Procedures. Re-assemble the tool with connections hand-tight only and in running position if applicable. Elements should be in a relaxed state—free from tension, compression, and other stresses that could cause deformation.

Store the tool, if possible, in an enclosed, temperature and humidity controlled environment. Avoid excessively high temperatures over long periods of time. Shield elastomeric parts from ultraviolet light sources. Keep tool dry and protected from condensation. Do not store in contact with or near volatile or corrosive chemicals. Do not store near ozone generating equipment or operations such as welding.

G) ELASTOMER TRIM TEMPERATURE GUIDE

RUBBER TYPE	TEMPERATURE RANGE
NITRILE	40° - 250°F
HSN (HNBR)	70° - 300°F
VITON	100° - 350°F

H) RECOMMENDED HAND TOOLS

- VISE
- GLOVES
- ALLEN WRENCHES
- TAPE MEASURE
- O-RING PICK
- BAR
  - 1/2-INCH
  - 3/4-INCH
- PAINT BRUSH, 2-INCH
- PIPE WRENCH, 3-FT (2 EA)
- “CHEATER” PIPE, 4-FT LONG
- ADJUSTABLE WRENCH, 12-INCH
- CORDLESS DRILL, 18V
- SNAP RING SPREADER PLIERS
- ALIGNING PUNCH
- BOLTS, 1/4-20 X 1-1/4” LONG (4EA)
- SCREWDRIVER SET, FLAT-TIPPED
- SOCKET SETS
  - 3/8-INCH DRIVE
  - 1/2-INCH DRIVE
- HAMMERS
  - SLEDGE
  - BALL PEEN
  - DEAD BLOW

I) DISASSEMBLY

I-1) Clamp top sub (6) in vise.

I-1.1) Unscrew and remove bottom sub (4) and shear sleeve assy (8) from mandrel assy (1).

I-1.1.1) Remove o-ring (20) from bottom sub (4).

I-1.2) Disassemble bottom sub (4) and shear sleeve assy (8):

I-1.2.1) Unscrew and remove pipe plug (16) from shear sleeve assy (8).

I-1.2.2) Remove shear pins (5) from hole in shear sleeve assy (8). Rotate shear sleeve assy (8) as needed.

I-1.2.3) Separate bottom sub (4) and shear sleeve assy (8).

I-1.2.4) Remove o-ring (19) from bottom sub (4).

I-1.3) Remove rubber mandrel assembly from mandrel assy (1) and disassemble:

I-1.3.1) Remove element (3) and cone (2) off of rubber mandrel (14).

I-1.3.2) Remove o-ring (19) from rubber mandrel (14).

I-1.4) Unscrew and remove button head cap screws (17) from J-body (7) and spring ring (13).

I-1.5) Remove drag springs (10).

I-1.6) Unscrew and remove button head cap screws (18) from cage ring (9).

I-1.7) Remove J-body assembly from mandrel assy (1) and disassemble:

I-1.7.1) Wedge slips (12) outward (if needed). Unscrew and remove J-body (7) from slip body (15).

I-1.7.2) Remove wedges (if needed). Remove slips (12) and slip springs (11) from slip body (15).

I-1.7.3) Remove spring ring (13) from J-body (7).

I-1.8) Unscrew and remove mandrel assy (1) from top sub (6) (**NOTE$_6$:** Left-hand threads).

NOTE$_4$: Do <u>NOT</u> wrench or clamp on seal surfaces.

I-1.9) Remove cage ring (9) from mandrel assy (1).

I-2) Unclamp and remove top sub (6) from vise.

J) ASSEMBLY

NOTE$_5$: Clean and inspect all parts. Replace all worn and damaged parts. Install parts in proper order and orientation.

J-1) Clamp top sub (6) in vise.

J-1.1) From upper end of mandrel assy (1), install cage ring (9) onto mandrel assy (1).

J-1.2) Screw mandrel assy (1) into top sub (6) (**NOTE$_6$**: Left-hand threads).

NOTE$_4$: Do NOT wrench or clamp on seal surfaces.

J-1.3) Assemble J-body assembly and install:

J-1.3.1) Install slips (12) and slip springs (11) into slip body (15).Wedge slips outward.

J-1.3.2) Screw slip body (15) onto J-body (7). Remove wedges.

J-1.3.3) Install spring ring (13) onto J-body (7).

J-1.3.4) Install J-body assembly onto mandrel assy (1).

J-1.4) Align holes in J-body (7) with threaded holes in cage ring (9). Screw button head cap screws (18) into cage ring (9).

J-1.5) Set drag springs (10) in place on J-body (7). Align holes in drag springs with threaded holes in J-body (7) and spring ring (13). Screw button head cap screws (17) into J-body (7) and spring ring (13).

J-1.6) Assemble rubber mandrel assembly and install:

J-1.6.1) Install o-ring (19) into groove in rubber mandrel (14).

J-1.6.2) Install cone (2) and element (3) onto rubber mandrel (19).

J-1.6.3) Install rubber mandrel assembly onto mandrel assy (1).

CAUTION$_4$: Do NOT rip or tear o-ring while installing.

J-1.7) Assemble bottom sub (4) and shear sleeve assy (8) and install:

J-1.7.1) Install o-ring (19) into groove in bottom sub (4).

J-1.7.2) Assemble bottom sub (4) and shear sleeve assy (8).

J-1.7.3) One at a time, align recessed hole with plug hole and install shear pin (5).

J-1.7.4) Once desired quantity of shear pins (5) are in place, screw pipe plug (16) into shear sleeve assy (8).

J-1.7.5) Install o-ring (20) in thread relief in bottom sub (4).

J-1.7.6) Screw bottom sub (4) and shear sleeve assy (8) onto mandrel assy (1).

CAUTION$_4$: Do NOT rip or tear o-ring while installing.

J-2) Unclamp top sub (6) from vise and remove assembled tool.

K) PARTS LIST

ITEM	QTY	DESCRIPTION	MATERIAL	P/N 41213
1	1	MANDREL ASSEMBLY	1026 CD/1026	41213210
2	1	CONE	1026	41213410
3	1	ELEMENT	80 DURO NITRILE	41213512
4	1	BOTTOM SUB	1026	41213615
5	18	SHEAR PIN (4000#)	BRASS	41000990
	SEE NOTE$_1$	OPTIONAL SHEAR PIN (6000#) (Contact D&L Oil Tools for recommendation on maximum shear value allowed for tool.)	STEEL, MILD	41000991
6	1	TOP SUB	1026	41213620
7	1	J-BODY	1026	41213310
8	1	SHEAR SLEEVE ASSEMBLY	L-80	41213850
9	1	CAGE RING	1026	41213325
10	24	DRAG SPRING	STAINLESS STEEL	40570920
11	18	SLIP SPRING	ELGILOY	7170901
12	6	SLIP	1026	70013110
13	1	SPRING RING	1026	41213820
14	1	RUBBER MANDREL	1026	41213220
15	1	SLIP BODY	L-80/1026	41213320
16	1	PIPE PLUG 1/4”	STEEL	SPP025
17	24	BUTTON HEAD CAP SCREW 5/16-18 X 5/8	STEEL	BHSC031C062
18	16	BUTTON HEAD CAP SCREW 5/16-24 X 1"	STEEL	BHSC031C100
19	2	247 O-RING	90 DURO NITRILE	90247
20	1	351 O-RING	90 DURO NITRILE	90351

REDRESS KIT (RDK)		41213050
ASSEMBLED WEIGHT		490 LBS

K) PARTS LIST (cont’d)

K-1) ELASTOMER TRIM OPTIONS

NOTE$_7$: For temperature range, refer to Elastomer Trim Temperature Guide.

K-1.1) HSN

ITEM	QTY	DESCRIPTION	MATERIAL	P/N 41213H
3	1	ELEMENT	80 DURO HSN	41213512H
19	2	247 O-RING	90 DURO HSN	90247H
20	1	351 O-RING	90 DURO HSN	90351H

REDRESS KIT (RDK)		41213050H

K-1.2) VITON

ITEM	QTY	DESCRIPTION	MATERIAL	P/N 41213V
3	1	ELEMENT	80 DURO VITON	41213512V
19	2	247 O-RING	90 DURO VITON	90247V
20	1	351 O-RING	90 DURO VITON	90351V

REDRESS KIT (RDK)		41213050V

L) TECHNICAL ILLUSTRATION

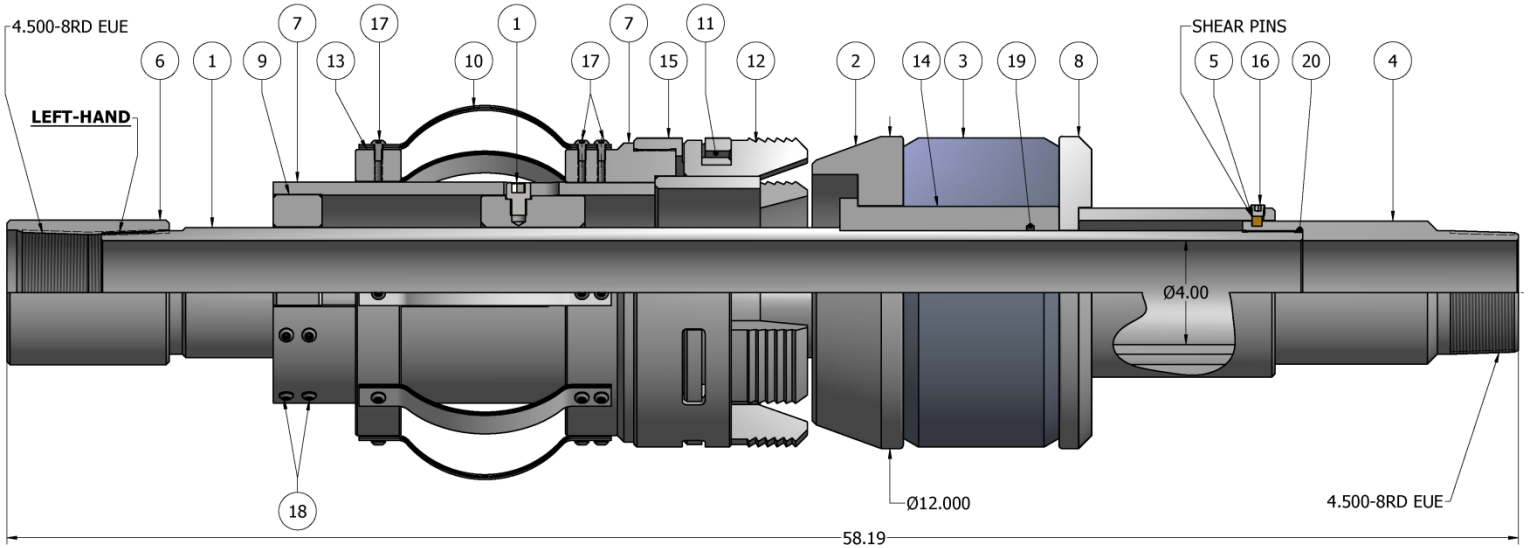

M) REVISION HISTORY

DATE	REVISION	DESCRIPTION OF CHANGES	REVISED BY	APPROVED BY
03/31/2017	B	Added HSN and Viton options, Pre-Installation Inspection Procedures, Storage Recommendations; Revised Elastomer Trim Temperature Guide	J.Anderson	N.Banker
10/09/13	A	Created new manual	-	-