A) DESCRIPTION

The WR Bridge Plug is wireline set, wireline retrieve, packer-type bridge plug capable of holding differential pressure from above or below. The WR Bridge Plug is used for a temporary bridge plug for acidizing, fracturing, cementing, casing pressure tests, well head replacement, and zone isolation. The WR Bridge Plug utilizes standard wireline or hydraulic setting tools.

B) RELATED TOOLS (sold separately)

B-1) WLAK f/ 2-3/8" WR Bridge Plug f/ #05 Hydraulic Setting Tool (P/N 73520-05)—refer to technical manual *DL-735-2375-1405*.

B-2) 2-7/8" Retrieving Tool (PN 73524RT)—refer to technical manual *DL-735-2875-1381*.

C) SPECIFICATION GUIDE

CASING			TOOL GAGE OD (INCHES)	THREAD CONNECTION PIN UP	PART NUMBER
SIZE (INCHES)	WEIGHT (LBS/FT)	RECOMMENDED HOLE SIZE (INCHES)			
2-7/8	8.6 – 8.7	2.228 – 2.367	2.125	0.6250-18 UNF	73524 73524H[1] 73524V[2]

Elastomer Trim Options: [1]HSN, [2]Viton

DIFFERENTIAL PRESSURE (MAX)		TENSILE LOAD SHEAR STUD RATING (MAX)	TENSILE LOAD RATING DURING RETRIEVAL (MAX)
FROM ABOVE	FROM BELOW		
10,000 PSI	10,000 PSI	7,000 LBS	18,000 LBS

D) PRE-INSTALLATION INSPECTION PROCEDURES

CAUTION[1]: D&L ships tool connections made-up **HAND TIGHT**—labeled with hand-tight tape on the tool (Fig. 1)—unless stated otherwise. Tighten/torque all connections properly before operating tool.

Fig. 1

GENERAL THREAD CONNECTION TORQUE RECOMMENDATIONS			
STUB ACME / ACME THREADS	INTERNAL TAPERED TUBING THREADS		PREMIUM THREADS
	UP TO 2-3/8"	GREATER THAN 2-3/8"	
600 – 800 FT-LBS	600 – 800 FT-LBS	800 – 1,200 FT-LBS	Consult thread manufacturer's recommendations.

GENERAL SCREW TORQUE RECOMMENDATIONS									
SCREW SIZE (INCHES)	#6	#8	#10	1/4	5/16	3/8	7/16	1/2	5/8 and larger
TORQUE RANGE (INCH-POUNDS)	5 – 8	10 – 15	18 – 25	25 – 40	50 – 80	90 – 135	160 – 210	250 – 330	450 - 650

D) PRE-INSTALLATION INSPECTION PROCEDURES (cont'd)

Before first use, D&L recommends disassembly and inspection of the tool unless stated otherwise. Ensure parts have not been damaged during shipping. Replace damaged parts with D&L replacement parts. Contact D&L sales for replacement part information.

Re-assemble the tool after inspection. Install parts in the correct order and orientation. Properly tighten connections.

Before re-using the tool, D&L recommends disassembly and inspection of the tool. Clean parts and ensure parts are in good working condition. Replace worn or damaged parts with D&L replacement parts.

When redressing the tool, D&L recommends replacement of all seals, elements, o-rings, shear screws, etc. Contact D&L sales for redress kit and/or other replacement part information.

E) SETTING PROCEDURES

CAUTION$_2$: Do not run the tool without properly tightening connections. Running the tool with loose connections may damage the tool and cause malfunction.

The WR Bridge Plug is set on a #05 Baker E-4 wireline pressure setting assembly and wireline adapter kit.

The recommended running speed for the WR Bridge Plug is 100 ft/min. Well conditions may require much slower speeds to avoid damaging the tool.

During setting, a calculated force of 7,000 lbs may be pulled on the 2-7/8" Wireline Set Bridge Plug.

F) RETRIEVING PROCEDURES

The WR Bridge Plug is retrieved using the WR Bridge Plug Retrieving Tool.

F-1.1) TUBING RETRIEVAL

Make up the retrieving tool on the work string and run it to the setting depth. In the event sand or other debris is present on top of the WR Bridge Plug, standard washing may be continued to equalize any differential pressure across the plug - set down approximately 1,200 lbs. This shifts the equalizing sleeve downward opening the equalizing ports and latches the retrieving collet into the latch of the WR Bridge Plug.

After the differential is equalized, the head is latched onto the plug. The tool is released by the application of a minimum of 3,600 lbs tension. Continue to move the tool up the hole to completely stretch out the slip system and retrieve the tool from the hole. Slowly retrieve the plug for 100 ft to allow the packing element system to relax and pass through the casing without hanging up. After the elements have relaxed, the recommended retrieving speed is 100 ft/min. Well conditions may require much slower speeds to avoid damaging the tool.

F-1.2) SANDLINE RETRIEVAL

Make up the retrieving tool with the stem and the jars. Position the jars immediately above the retrieving tool. Flag the line and run the tools to setting depth. Jar down to open the equalizing sleeve. Allow enough time for any pressure differential to equalize. Pull a minimum of 3,600 lbs or jar upward to release the plug. Continue to move the tool up the hole to completely stretch out the slip system and retrieve the tool from the hole. Slowly retrieve the plug for 100 ft to allow the packing element system to relax and pass through the casing without hanging up. After the elements have relaxed, the recommended retrieving speed is 100 ft/min. Well conditions may require much slower speeds to avoid damaging the tool.

G) STORAGE RECOMMENDATIONS

When preparing the tool for storage, follow the Pre-Installation Inspection Procedures. Re-assemble the tool with connections hand-tight only and in running position if applicable. Elements should be in a relaxed state—free from tension, compression, and other stresses that could cause defor1mation.

Store the tool, if possible, in an enclosed, temperature and humidity controlled environment. Avoid excessively high temperatures over long periods of time. Shield elastomeric parts from ultraviolet light sources. Keep tool dry and protected from condensation. Do not store in contact with or near volatile or corrosive chemicals. Do not store near ozone generating equipment or operations such as welding.

H) ELASTOMER TRIM TEMPERATURE GUIDE

NITRILE (STD)			
TEMPERATURE RANGE (F°)	**DUROMETER**		
	END	**MIDDLE**	**END**
40° - 125°	80	70	80
125° - 250°	90	70	90
150° - 250°	90	80	90
250° +	Contact D&L Sales		

RUBBER TYPE	**TEMPERATURE RANGE** (F°)
NITRILE	40° - 250°F
HSN (HNBR)	70° - 300°F
VITON	100° - 350°F

I) RECOMMENDED HAND TOOLS

- VISE
- GLOVES
- ALLEN WRENCHES
- TAPE MEASURE
- O-RING PICK
- BAR
  - 1/2-INCH
  - 3/4-INCH
- PAINT BRUSH, 2-INCH
- PIPE WRENCH, 3-FT (2 EA)
- "CHEATER" PIPE, 4-FT LONG
- ADJUSTABLE WRENCH, 12-INCH
- CORDLESS DRILL, 18V
- SNAP RING SPREADER PLIERS
- ALIGNING PUNCH
- SCREWDRIVER SET, FLAT-TIPPED
- SOCKET SETS
  - 3/8-INCH DRIVE
  - 1/2-INCH DRIVE
- HAMMERS
  - SLEDGE
  - BALL PEEN
  - DEAD BLOW

J) DISASSEMBLY

J-1) Clamp upper gage ring (20) in vise.

J-1.1) From upper end of tool, unscrew and remove shear stud (8) from shear coupling (10).

J-1.2) Unscrew and remove shear coupling (10) from inner mandrel (1).

J-1.3) Unscrew and remove shear screws (24) from latch (4).

J-1.4) Remove latch (4) from inner mandrel (1).

J-1.5) Unscrew and remove shear screw (24) from equalizing sleeve (15).

J-1.6) Remove equalizing sleeve (15) from ratchet mandrel top (6).

J-1.6.1) Remove o-rings (27) from equalizing sleeve (15).

J-1.7) Moving to lower end of tool, unscrew and remove inner mandrel cap (19) from inner mandrel (1).

J-1.8) Moving to upper end of tool, remove inner mandrel (1) from ratchet mandrel (2) and ratchet mandrel top (6).

NOTE1: Additional pulling force may be required to overcome spring resistance of collet fingers on ratchet mandrel top (6).

J) DISASSEMBLY (cont'd)

J-1.9) Unscrew and remove ratchet mandrel top (6) from ratchet mandrel (2).

J-1.10) Unscrew and remove shear screws (21) from upper gage ring (20).

J-1.11) Unscrew upper cone (9) from lower gage ring (5).

J-1.12) Remove slip body assembly from lower end of rubber mandrel (11). Set assembly aside temporarily to be disassembled in later steps.

J-1.13) Unscrew and remove shear screw (22) from rubber mandrel (11).

J-1.14) Unscrew and remove ratchet ring (3) from rubber mandrel (11).

J-1.15) Unscrew rubber mandrel (11) from upper gage ring (20).

J-1.16) Remove rubber mandrel assembly and disassemble:

J-1.16.1) Unscrew shear screws (21) from lower gage ring (5).

J-1.16.2) Remove elements (13,14), rubber spacers (12), and lower gage ring (5) from rubber mandrel (11).

J-2) Unclamp and remove upper gage ring (20) from vise.

J-2.1) Remove o-rings (27, 28) from upper gage ring (20).

J-3) Clamp slip body assembly in vise and disassemble:

J-3.1) Wedge slips (7) outwards.

J-3.2) Remove ratchet mandrel (2) from lower and upper cones (16, 9).

NOTE$_7$: Additional force may be required to overcome spring resistance of collet fingers of ratchet mandrel (2) on cones (16, 9).

J-3.2.1) Remove o-ring (26) from ratchet mandrel (2).

J-3.3) Disassemble slip body assembly:

J-3.3.1) Unscrew and remove low head cap screws (29) from lower cone (16).

J-3.3.2) Remove lower cone (16) from slip body (18).

J-3.3.3) Remove slips assemblies and disassemble. Remove wedges:

J-3.3.3.1) Remove slip assemblies from slip body (18).

J-3.3.3.2) Unscrew and remove button head cap screws (23) from slips (7).

J-3.3.3.3) Remove slip springs (17) from slips (7).

J-3.3.4) Unscrew and remove low head cap screws (25) from upper cone (9).

J-3.3.5) Remove upper cone (9) from slip body (18).

J-4) Unclamp and remove slip body (18) from vise.

K) ASSEMBLY

NOTE$_2$: Clean and inspect all parts. Replace all worn and damaged parts. Install parts in proper order, and orientation and tighten/torque all connections properly.

CAUTION$_3$: To ensure tool operates properly, install O-rings in O-ring grooves - **NOT** in thread reliefs (unless stated otherwise) (Fig. 2).

K-1) Clamp slip body (18) in vise and assemble slip body assembly:

K-1.1) Install upper cone (9) into slip body (18) from lower end of slip body. Align slots in slip body (18) with threaded holes in upper cone (9).

K-1.2) Screw set screws (25) into upper cone (9).

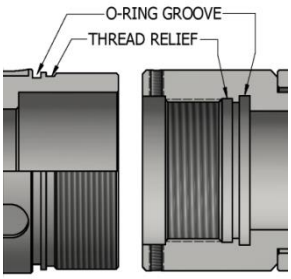

Fig. 2

K) ASSEMBLY (cont'd)

K-1.3) Assemble slips (7) and install into slip body (18):

K-1.3.1) Set slip springs (17) in place on slips (7).

NOTE3: Install three (3 ea) springs per slip (Fig. 3).

K-1.3.2) Screw button head cap screws (23) into slips to secure slip springs (17).

K-1.3.3) Install slips (7) into slip body (18). Wedge slips outward.

Fig. 3

K-1.4) Install lower cone (16) into slip body (18). Align slots in slip body (18) with threaded holes in lower cone (16).

K-1.5) Screw low head cap screws (29) into lower cone (16).

K-1.6) Install o-ring (26) in o-ring groove in ratchet mandrel (2).

K-1.7) Install ratchet mandrel (2) into upper cone (9) and lower cone (16):

NOTE7: Additional force may be required to overcome spring resistance of collet fingers of ratchet mandrel (2) on cones (16, 9).

K-1.7.1) Unclamp slip body (18) and remove slip body assembly from vise. Set assembly aside temporarily to be installed in later steps.

K-2) Install o-rings (27, 28) in o-ring grooves in upper gage ring (20).

K-3) Clamp upper gage ring (20) in vise.

K-3.1) Assemble rubber mandrel assembly and install:

K-3.1.1) Install lower gage ring (5), elements (13, 14), and rubber spacers (12) onto rubber mandrel (11).

K-3.1.2) Screw rubber mandrel (11) into upper gage ring (20). Align threaded holes in lower gage ring (5) with counterbores in rubber mandrel (11).

CAUTION6: Do not rip or tear o-ring during installation.

K-3.1.3) Screw shear screws (21) into lower gage ring (5). Tighten until shear screws contact rubber mandrel (11). Back shear screws out 1/4 turn.

K-3.2) Thread ratchet ring (3) into rubber mandrel (11) until flush with bottom edge of thread in rubber mandrel (11).

NOTE4: Threads on ratchet ring (3) are directional - it MUST be in installed in correct direction for tool to work properly.

K-3.3) Align gap in ratchet ring (3) with threaded hole in rubber mandrel (11).

CAUTION5: Should not require more than one revolution past flush to align ring with threaded hole. Back out ratchet ring as necessary.

K-3.4) Screw shear screw (22) into rubber mandrel (11). Tighten until shear screw is flush with OD of rubber mandrel (11).

K-3.5) Install ratchet mandrel assembly into rubber mandrel (11). Align shear screw groove in ratchet mandrel (2) with threaded holes in upper gage ring (20).

K-3.6) Screw shear screws (21) into upper gage ring (20). Tighten until shear screws contact ratchet mandrel (2). Back shear screws out 1/4 turn.

K-3.7) Screw upper cone (9) into lower gage ring (5).

K-3.8) Screw ratchet mandrel top (6) into ratchet mandrel (2).

NOTE5: For added leverage, insert 1/4" rod through slip body (18) as needed.

K-3.9) Install inner mandrel (1) into ratchet mandrel (2).

NOTE6: Additional force may be required to get inner mandrel (1) into collet fingers on ratchet mandrel top (6).

CAUTION6: Do not rip or tear o-ring during installation.

K-3.10) Moving to lower end of tool, screw inner mandrel cap (19) onto inner mandrel (2).

K) ASSEMBLY (cont'd)

K-3.11) Moving to upper end of tool, install o-rings (27) in o-ring grooves in equalizing sleeve (15).

K-3.12) Install equalizing sleeve (15) onto ratchet mandrel top (6) and ratchet mandrel (2). Align threaded hole in equalizing sleeve (15) with counterbore in ratchet mandrel (2).

CAUTION$_6$: Do not rip or tear o-ring during installation.

K-3.13) Screw shear screw (24) into equalizing sleeve (15). Tighten until shear screw contacts ratchet mandrel (2). Back screw out 1/4 turn.

K-3.14) Install latch (4) onto inner mandrel (1). Align threaded holes in latch (4) with groove in inner mandrel (1).

K-3.15) Screw shear screws (24) into latch (4). Tighten until shear screws contact inner mandrel (1). Back screws out 1/4 turn.

K-3.16) Screw shear coupling (10) onto inner mandrel (1)

K-3.17) Screw shear stud (8) into shear coupling (10).

K-3.18) Back up on shear stud (8) and apply 80 - 100 ft-lbs of torque between shear stud (8) and inner mandrel cap (19).

K-4) Unclamp upper gage ring (20) from vise and remove assembled tool.

L) PARTS LIST

ITEM	QTY	DESCRIPTION	MATERIAL	P/N 73524
1	1	INNER MANDREL	DLMS150	73520207
2	1	RATCHET MANDREL	DLMS150	73520210
3	1	RATCHET RING	DLMS41X80	73520011
4	1	LATCH	DLMS110	73520660
5	1	LOWER GAGE RING	DLMS110	73524850
6	1	RATCHET MANDREL TOP	DLMS150	73520206
7	3	CARBIDE SLIP	DLMS110	73524136C
8	1	SHEAR STUD (7,000#)	DLMS110	73525901
9	1	UPPER CONE	DLMS110	73520410
10	1	SHEAR COUPLING	DLMS110	73520900
11	1	RUBBER MANDREL	DLMS150	73524220
12	2	RUBBER SPACER	DLMS60	73524840
13	1	ELEMENT	70 DURO NITRILE	73524511
14	2	ELEMENT	90 DURO NITRILE	73524513
15	1	OUTER SLEEVE	DLMS80	73520620
16	1	LOWER CONE	DLMS110	73520420
17	9	SLIP SPRING	DLMINC265	WP04000
18	1	SLIP BODY	DLMS110	73524335
19	1	INNER MANDREL CAP	DLMS150	73525235
20	1	UPPER GAGE RING	DLMS110	73524830
21	3	SHEAR SCREW, (2375#)	DLM360BRS	90555990

L) PARTS LIST (cont'd)

ITEM	QTY	DESCRIPTION	MATERIAL	P/N 73525
22	1	SLOTTED SHEAR SCREW (750#) #10-32 UNF X 1/4	DLM360BRS	BSSSLT1032F025
23	3	BUTTON HEAD SOCKET CAP SCREW #6-32 UNC X 1/8	STEEL	BHSC632C012
24	4	SLOTTED SHEAR SCREW (1200#) 1/4-20 UNC X 5/16	DLM360BRS	BSSSLT025C031
25	6	LOW HEAD SOCKET CAP SCREW #10-24 UNC X 3/16	STEEL	LHSC1024C018
26	1	207 O-RING	90 DURO NITRILE	90207
27	3	213 O-RING	90 DURO NITRILE	90213
28	1	217 O-RING	90 DURO NITRILE	90217
29	6	LOW HEAD SOCKET CAP SCREW 1/4-20 UNC X 3/16	STEEL	LHSC025C018

REDRESS KIT (RDK)		735324050
ASSEMBLED WEIGHT		19 LBS

L-1) ELASTOMER TRIM OPTIONS

NOTE$_2$: For temperature range, refer to Elastomer Trim Temperature Guide.

L-1.1) HSN

ITEM	QTY	DESCRIPTION	MATERIAL	P/N 73524H
13	1	ELEMENT	70 DURO HSN	73524511H
14	2	ELEMENT	90 DURO HSN	73524513H
26	1	207 O-RING	90 DURO HSN	90207H
27	3	213 O-RING	90 DURO HSN	90213H
28	1	217 O-RING	90 DURO HSN	90217H

REDRESS KIT (RDK)		735324050H

L-1.2) VITON

ITEM	QTY	DESCRIPTION	MATERIAL	P/N 73524V
13	1	ELEMENT	70 DURO VITON	73524511V
14	2	ELEMENT	90 DURO VITON	73524513V
26	1	207 O-RING	90 DURO VITON	90207V
27	3	213 O-RING	90 DURO VITON	90213V
28	1	217 O-RING	90 DURO VITON	90217V

REDRESS KIT (RDK)		735324050V

M) TECHNICAL ILLUSTRATION

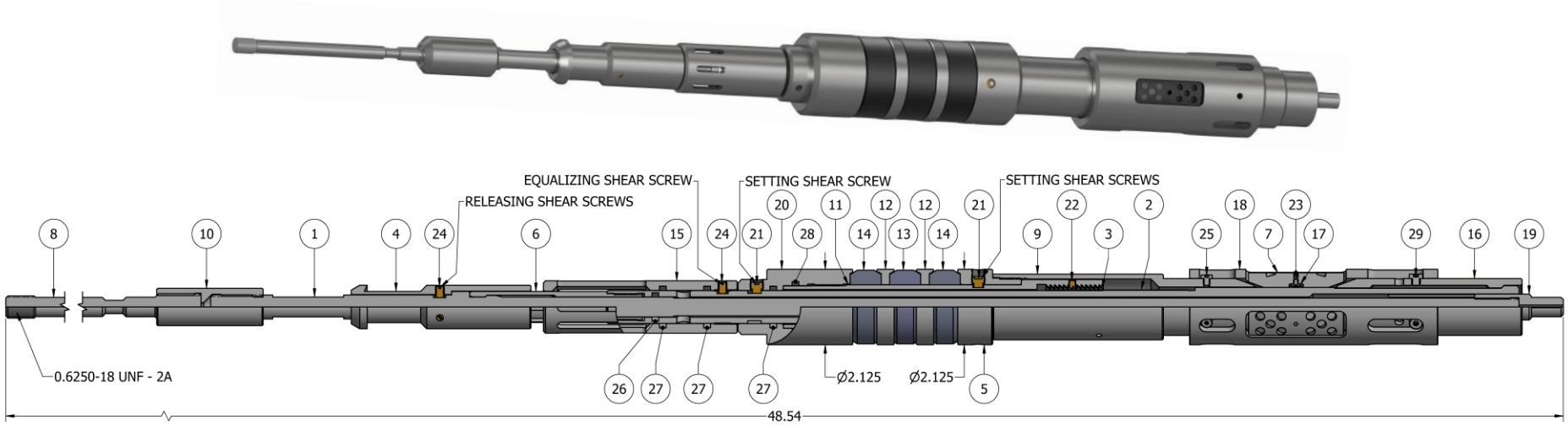

N) REVISION HISTORY

DATE	REVISION	DESCRIPTION OF CHANGES	REVISED BY	APPROVED BY
06/11/2021	B	Revised 73524136C was 73524135C, WP04000 was WP04100	J.Anderson	E.Visaez
10/09/2020	A	Created new manual	-	-