A) DESCRIPTION

The Retrievable Seal Bore (RSB) Packer delivers high performance with simplicity of design and desirable economics. This packer is rated for 7,000 PSI at 300°F with standard nitrile elastomers and can be equipped to withstand severe corrosion and high temperatures. The RSB Packer is set on wireline (with minor changes) or on tubing with a hydraulic setting tool and is retrieved using a retrieving tool.

NOTE$_1$: A retrieving tool is required to retrieve these packers and must be purchased separately.

NOTE$_2$: When run on wireline, this packer requires at least a 30 second burn on the wireline setting tool to ensure a proper set. A burn time less than 30 seconds may shear the setting tool off of the packer before fully setting the packer.

B) RELATED TOOLS (sold separately)

B-1) 7” X 4.000” Wireline Adapter Kit (WLAK) (P/N 26774)—refer to technical manual *DL-267-7000-633*.

B-2) 7” X 4.000” RSB Retrieving Tool (P/N 26670)—refer to technical manual *DL-266-7000-433*.

B-3) 4.000” Seal Bore Accessories (P/N varies)—refer to technical manual *DL-518-4000-440*.

C) SPECIFICATION GUIDE

CASING			TOOL OD (INCHES)	BORE (INCHES)	MIN ID THRU SEALS (INCHES)	PART NUMBER
SIZE (INCHES)	**WEIGHT** (LBS/FT)	**RECOMMENDED HOLE SIZE** (INCHES)				
7	23.0 – 29.0	6.184 – 6.366	5.938	4.000	3.00	26574 26574H[1] 26574V[2]

Elastomer Trim Options: [1]HSN, [2]Viton

DIFFERENTIAL PRESSURE (MAX)	HANGING WEIGHT ON SET TOOL (MAX)	TENSILE LOAD THRU TOOL (MAX)
7,000 PSI	129,000 LBS*	129,000 LBS

*Casing must be cemented for this load rating.

D) PRE-INSTALLATION INSPECTION PROCEDURES

CAUTION$_1$: D&L ships tool connections made-up **HAND TIGHT**—labeled with hand-tight tape on the tool (Fig. 1)—unless stated otherwise. Tighten/torque all connections properly before operating tool.

Fig. 1

GENERAL THREAD CONNECTION TORQUE RECOMMENDATIONS			
STUB ACME / ACME THREADS	**INTERNAL TAPERED TUBING THREADS**		**PREMIUM THREADS**
	UP TO 2-3/8”	**GREATER THAN 2-3/8”**	
600 – 800 FT-LBS	600 – 800 FT-LBS	800 – 1,200 FT-LBS	Consult thread manufacturer’s recommendations.

D) PRE-INSTALLATION INSPECTION PROCEDURES (cont’d)

GENERAL SCREW TORQUE RECOMMENDATIONS									
SCREW SIZE (INCHES)	#6	#8	#10	1/4	5/16	3/8	7/16	1/2	5/8 and larger
TORQUE RANGE (INCH-POUNDS)	5 – 8	10 – 15	18 – 25	25 – 40	50 – 80	90 – 135	160 – 210	250 – 330	450 - 650

Before first use, D&L recommends disassembly and inspection of the tool unless stated otherwise. Ensure parts have not been damaged during shipping. Replace damaged parts with D&L replacement parts. Contact D&L sales for replacement part information.

Re-assemble the tool after inspection. Install parts in the correct order and orientation. Properly tighten connections.

Before re-using the tool, D&L recommends disassembly and inspection of the tool. Clean parts and ensure parts are in good working condition. Replace worn or damaged parts with D&L replacement parts.

When redressing the tool, D&L recommends replacement of all seals, elements, o-rings, shear screws, etc. Contact D&L sales for redress kit and/or other replacement part information.

E) SETTING PROCEDURES

CAUTION2: Do not run the tool without properly tightening connections. Running the tool with loose connections may damage the tool and cause malfunction.

Run the RSB Packer in on a wireline or hydraulic pressure setting assembly with the RSB Setting Adapter Kit. Setting is initiated at approximately 8,000 lbs of force. The slips are set and the elements are compressed at approximately 36,000 lbs. The setting equipment will shear out at approximately 50,000 lbs of force.

To release from the B2 Hydraulic setting tool using a solid setting nut, right-hand rotation is required after the packer is set.

F) RELEASING PROCEDURES

Run the RSB Retrieving Tool into the well until the tool is sitting on the packer. Set down weight to shear the screws retaining the latch mandrel of the retrieving tool and to engage the threaded latch of the retrieving tool with the top sub of the packer (Refer to RSB Retrieving Tool manual for retrieving tool operating procedures). Continue setting down to engage releasing collet of the retrieving tool with the support ring of the packer. Once fully the retrieving tool is fully engaged with the packer, straight pick up a minimum of 10,000 lbs to shear the screws retaining the packer support ring. Continue picking up to release the slips and relax the packing element. The packer may now be removed from the well.

F-1) EMERGENCY RELEASE

If the packer fails to release, the retrieving tool can be released with straight pick up (Refer to RSB Retrieving Tool manual for retrieving tool operating procedures).

G) STORAGE RECOMMENDATIONS

When preparing the tool for storage, follow the Pre-Installation Inspection Procedures. Re-assemble the tool with connections hand-tight only and in running position if applicable. Elastomers should be in a relaxed state—free from tension, compression or other deformation.

Store the tool, if possible, in an enclosed, temperature and humidity controlled environment. Avoid excessively high temperatures over long periods of time. Shield elastomeric parts from ultraviolet light sources. Keep tool dry and protected from condensation. Do not store in contact with or near volatile or corrosive chemicals. Do not store near ozone generating equipment or operations such as welding.

H) ELASTOMER TRIM TEMPERATURE GUIDE

RUBBER TYPE	TEMPERATURE RANGE
NITRILE	40° - 250°F
HSN (HNBR)	70° - 300°F
VITON	100° - 350°F

I) RECOMMENDED HAND TOOLS

- VISE
- GLOVES
- ALLEN WRENCHES
- TAPE MEASURE
- O-RING PICK
- BAR
  - 1/2-INCH
  - 3/4-INCH
- PAINT BRUSH, 2-INCH
- PIPE WRENCH, 3-FT (2 EA)
- “CHEATER” PIPE, 4-FT LONG
- ADJUSTABLE WRENCH, 12-INCH
- CORDLESS DRILL, 18V
- SNAP RING SPREADER PLIERS
- ALIGNING PUNCH
- SCREWDRIVER SET, FLAT-TIPPED
- SOCKET SETS
  - 3/8-INCH DRIVE
  - 1/2-INCH DRIVE
- HAMMERS
  - SLEDGE
  - BALL PEEN
  - DEAD BLOW

J) DISASSEMBLY

J-1) Clamp setting sleeve (5) in vise.

J-1.1) Unscrew and remove set screws (11) from lower connecter sleeve (14).

J-1.2) Unscrew and remove bottom sub (18) from lower connecter sleeve (14).

J-1.2.1) Remove o-ring (26) from bottom sub (18).

J-1.3) Unscrew and remove set screws (11) from lower connecter sleeve (14).

J-1.4) Unscrew and remove torque screws (10) from releasing collet (3).

J-1.5) Unscrew and remove lower connecter sleeve (14) from lower cone (16).

J-1.6) Unscrew and remove set screws (11) from releasing collet (3).

J-1.7) Unscrew releasing collet (3) from mandrel (2). Remove releasing collet assembly and disassemble:

J-1.7.1) Unscrew and remove shear screws (21) from fingers on releasing collet (3).

J-1.7.2) Separate releasing collet (3) from support ring (12)

J-1.7.3) Remove o-rings (25, 26) from releasing collet (3).

J-1.8) Unscrew and remove shear screws (23) from slip body (6).

J-1.9) Unscrew and remove low head cap screws (24) from lower cone (16).

J-1.10) Remove lower cone (16) from mandrel (2).

J-1.11) Remove pickup ring (8) from mandrel (2).

J-1.12) Unscrew upper cone (9) from gage ring (7).

J) DISASSEMBLY (cont’d)

J-1.13) Wedge slips outwards (if needed). Remove slip body assembly and disassemble:

J-1.13.1) Remove wedges (if needed). Remove slips (17) and slip springs (20) from slip body (6).

J-1.13.2) Unscrew and remove low head cap screws (24) from upper cone (9).

J-1.13.3) Separate upper cone (9) from slip body (6).

J-1.14) Remove gage ring (7) and element (13) from mandrel (2).

J-1.15) Unscrew and remove shear screws (15, 22) from lock ring housing (4).

J-1.16) Unscrew lock ring housing (4) from lock ring (19) and remove from mandrel (2).

J-1.17) Unscrew and remove lock ring (19) from mandrel (2) (**NOTE$_3$**: Left-hand threads).

NOTE$_4$: Using snap ring spreader pliers, lock ring may be spread slightly to be removed from mandrel.

J-1.18) Unscrew and remove torque screws (10) from top sub (1).

J-1.19) Remove mandrel assembly from setting sleeve (5) and disassemble:

J-1.19.1) Unscrew and remove set screws (11) from top sub (1).

J-1.19.2) Unscrew and remove top sub (1) from mandrel (2).

J-2) Unclamp and remove setting sleeve (5) from vise.

K) ASSEMBLY

NOTE$_5$: Install parts in proper order, and orientation and tighten/torque all connections properly.

CAUTION$_3$: To ensure tool operates properly, install o-rings in o-ring grooves **NOT** thread reliefs unless stated otherwise (Fig. 2).

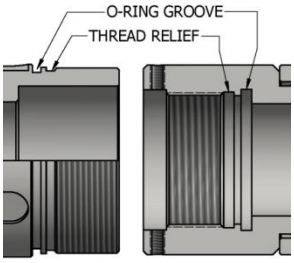

Fig. 2

K-1) Clamp setting sleeve (5) in vise.

K-1.1) Assemble mandrel assembly and install:

K-1.1.1) Screw top sub (1) onto mandrel (2).

K-1.1.2) Screw set screws (11) into top sub (1).

K-1.1.3) Install mandrel assembly into setting sleeve (5). Align threaded holes in top sub with slots in setting sleeve.

K-1.1.4) Screw torque screws (10) into top sub (1).

K-1.2) Install lock ring (19) onto mandrel (2). Screw and/or slide lock ring onto the upper end of ratchet threads on mandrel (2) (**NOTE$_3$**: Left-hand threads).

K-1.3) Install lock ring housing (4) onto mandrel (2) and screw onto lock ring (19). Align threaded holes in lock ring housing with shear screw groove in top sub (1) and gap in lock ring.

K-1.4) Screw shear screw (15) into lock ring housing (4). Tighten until shear screw makes contact with mandrel (2). Back shear screw out 1/4 turn.

K-1.5) Screw shear screws (22) into lock ring housing (4). Tighten until shear screws make contact with top sub (1). Back shear screws out 1/4 turn.

K-1.6) Install element (13) onto mandrel (2).

K-1.7) Install rubber retainer (7) onto mandrel (2).

K-1.8) Assemble slip cage assembly and install:

K-1.8.1) Install upper cone (9) into upper end of slip cage (6).

K-1.8.2) Set slip springs (20) and slips (17) in place in slip cage (6). Wedge slips outwards to hold them in place.

K) ASSEMBLY (cont’d)

K-1.8.3) Install slip cage assembly onto mandrel (2) and screw upper cone (9) into rubber retainer (7). Remove wedges.

K-1.9) Install pickup ring (8) into pickup ring groove in mandrel (2). Slide slip cage (6) upwards as necessary to access groove.

K-1.10) Align slots in slip cage (6) with threaded holes in upper cone (9). Screw low head cap screws (24) into upper cone.

K-1.11) Align threaded holes for shear screws in slip cage (6) with pocket holes in upper cone (9). Screw shear screws (23) into slip cage. Tighten until shear screws make contact with upper cone. Back shear screws out 1/4 turn.

K-1.12) Install lower cone (16) onto mandrel (2). Align threaded holes in lower cone with slots in slip cage (6).

K-1.13) Screw low head cap screws (24) into lower cone (9).

K-1.14) Align threaded holes for shear screws in slip cage (21) with pocket holes in lower cone (10). Screw shear screws (23) into slip cage. Tighten until shear screws make contact with lower cone. Back shear screws out 1/4 turn.

K-1.15) Assemble releasing collet assembly and install:

K-1.15.1) Install o-rings (25, 26) in o-ring grooves in releasing collet (3).

K-1.15.2) Install support ring (12) into releasing collet (3). Align pocket holes in support ring with threaded holes in releasing collet.

K-1.15.3) Screw shear screws (21) into releasing collet (3). Tighten until shear screws make contact with support ring (12). Back shear screws out 1/4 turn.

K-1.15.4) Screw releasing collet (3) onto mandrel (2).

CAUTION$_4$: Do NOT rip or tear o-ring during installation.

K-1.15.5) Screw set screws (11) into releasing collet (3).

K-1.16) Install torque sleeve (14) onto releasing collet (3) and screw onto lower cone (16) and releasing collet (3). Align slots in torque sleeve with threaded holes in releasing collet.

CAUTION$_4$: Do NOT rip or tear o-ring during installation.

K-1.17) Screw torque screws (10) into releasing collet (3).

K-1.18) Screw set screws (11) into lower cone (9).

K-1.19) Install o-ring (26) in o-ring groove in bottom sub (18).

K-1.20) Screw bottom sub (18) into torque sleeve (14).

CAUTION$_4$: Do NOT rip or tear o-ring during installation.

K-1.21) Screw set screws (11) into torque sleeve (14).

K-2) Unclamp setting sleeve (5) from vise and remove assembled tool.

L) PARTS LIST

ITEM	QTY	DESCRIPTION	MATERIAL	P/N 26574
1	1	TOP SUB	DLMS110	26574371
2	1	MANDREL	DLMS80	26574210
3	1	RELEASING COLLET	DLMS80	26570661
4	1	LOCK RING HOUSING	DLMS80	26574855
5	1	SETTING SLEEVE	DLMS60	26574761
6	1	SLIP BODY	DLMS80	26570320
7	1	GAGE RING - LOWER	DLMS35	26574860
8	1	PICKUP RING	DLMS80	26574662
9	1	UPPER CONE	DLMS80	26570410
10	4	TORQUE SCREW	STEEL	SCS037C037
11	13	SET SCREW 3/8-16 UNC X 3/8	STEEL	SSS037C037
12	1	SUPPORT RING	DLMS60	26570530
13	1	ELEMENT	80 DURO NITRILE	26574512
14	1	LOWER CONNECTOR SLEEVE	DLMS80	26574611
15	1	SHEAR SCREW (750#) #10-32 UNF X 3/8	DLM360BRS	BSSSLT1032F037
16	1	LOWER CONE	DLMS80	26570420
17	4	SLIP	DLMS60	26570110
18	1	BOTTOM SUB	DLMS80	26574621
19	1	LOCK RING	DLMS80	67070011
20	4	SLIP SPRING	-	DL94830
21	8	SHEAR SCREW (1200#) 1/4-20 UNC X 1/4	DLM360BRS	BSSSLT025C025
22	10	SHEAR SCREW (1200#) 1/4-20 UNC X 5/16	DLM360BRS	BSSSLT025C031
23	12	SHEAR SCREW (3400#) 3/8-16 UNC X 3/8	DLM360BRS	BSSSLT037C037
24	4	LOW HEAD CAP SCREW 3/8-16 UNC X 3/8	STEEL	LHSC037C037
25	1	247 O-RING	90 DURO NITRILE	90247
26	2	352 O-RING	90 DURO NITRILE	90352
27	10	DRIV-LOK PIN (4800#) 5/16 X 1”	4140	DLP031100*

*Refer to WLAK technical manual for placement.

REDRESS KIT (RDK)		26570050
ASSEMBLED WEIGHT		163 LBS

L) PARTS LIST (cont’d)

L-1) ELASTOMER TRIM OPTIONS

NOTE$_6$: For temperature range, refer to Elastomer Trim Temperature Guide.

L-1.1) HSN

ITEM	QTY	DESCRIPTION	MATERIAL	P/N 26574H
13	1	ELEMENT	80 DURO HSN	26574512H
25	1	247 O-RING	90 DURO HSN	90247H
26	2	352 O-RING	90 DURO HSN	90352H

REDRESS KIT (RDK)		26570050H

L-1.2) VITON

ITEM	QTY	DESCRIPTION	MATERIAL	P/N 26574V
13	1	ELEMENT	80 DURO VITON	26574512V
25	1	247 O-RING	90 DURO VITON	90247V
26	2	352 O-RING	90 DURO VITON	90352V

REDRESS KIT (RDK)		26570050V

M) TECHNICAL ILLUSTRATION

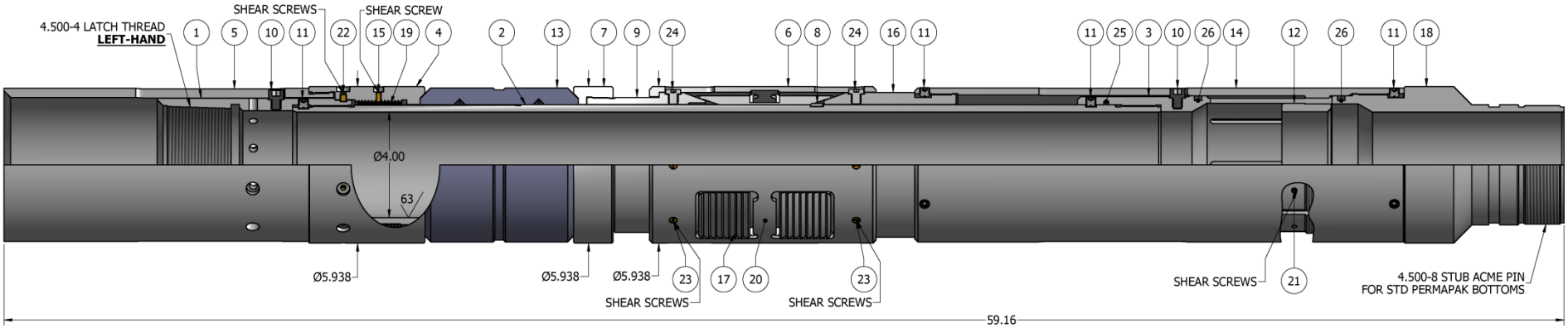

N) REVISION HISTORY0

DATE	REVISION	DESCRIPTION OF CHANGES	REVISED BY	APPROVED BY
10/10/2023	G	Corrected recommended hole size	J.Anderson	E.Visaez
04/09/2021	F	Revised nitrile temp. rating, DL94830 was DL94829	J.Anderson	E.Visaez
07/13/2016	E	Added max hanging weight on set tool and tensile load thru tool, General Screw Torque Recommendations; Revised Elastomer Trim Temperature Guide Nitrile and HSN temperature ranges, DLP031100 was DLP031062	J.Anderson	C.Colvin
08/06/2015	D	Added Related Tools, HSN and Viton options, max. differential pressure, Pre-Installation Inspection and Storage Procedures, Recommended Tools, Elastomer Trim Temperature Guide, P/N DLP031062	J.Anderson	T.Myerley