A) DESCRIPTION

The VSI-X HT Single String Double Grip Production Packer is one of the most versatile packers on the market. This packer is a modification of the ASI-X HT Packer with the advantage of being able to set on electric line or hydraulically.

An On-Off Tool Stinger with a Wireline Plug installed can be attached to the top of this packer. This packer can then be lubricated in the hole and set under pressure. Once set, casing pressure can be bled off, and the tubing with an On-Off Tool Overshot can be run and latched onto the packer. The Wireline Plug can then be removed.

This packer easily converts to a mechanically set ASI-X HT Packer – just remove the shear screws and install drag blocks and drag block springs. The ASI-X HT Packer sets with 1/4 right-hand rotation and releases with 1/4 right-hand rotation. The ASI-X Packer can be left in tension, compression or neutral.

NOTE$_1$: Stinger and setting equipment sold separately.

NOTE$_2$: This packer requires at least a 30 second burn on the wireline setting tool to ensure a proper set. A burn time less than 30 seconds may shear the setting tool from the packer <u>before</u> fully setting the packer.

B) RELATED TOOLS (sold separately)

B-1) 7” X 3-1/2” Wireline Adapter Kit (WLAK) (PN 97174)—refer to technical manual *DL-971-7000-247*.

B-2) 7” X 3-1/2” DT-2 On/Off Tool (PN 51273)—refer to technical manual *DL-512-3500-131*.

B-3) 3-1/2” Stinger—actual P/N varies depending on customer requirements.

C) SPECIFICATION GUIDE

CASING			TOOL		THREAD CONNECTION BOX UP / PIN DOWN	PART NUMBER
SIZE (INCHES)	**WEIGHT** (LBS/FT)	**RECOMMENDED HOLE SIZE** (INCHES)	**GAGE OD** (INCHES)	**NOMINAL ID** (INCHES)		
7	17.0 - 26.0	6.276 - 6.538	6.000	3.00	3-1/2 EUE	60174HT 60174HTH[1] 60174HTV[2] 60174HTC[3] 60174HTHC[4] 60174HTVC[5]
	26.0 – 32.0	6.094 – 6.276	5.875	3.00	3-1/2 EUE	60173HT 60173HTH[1] 60173HTV[2] 60173HTC[3] 60173HTHC[4] 60173HTVC[5]

Tool Options: [1]HSN, [2]Viton, [3]Nitrile, Carbide, [4]HSN, Carbide, [5]Viton, Carbide

NOTE$_3$: Tools listed are right-hand set / right-hand release.

NOTE$_4$: Use of a Double Hook J-slot Packer is recommended when running with a pumpjack to help prevent the packer from unsetting during well production.

C) SPECIFICATION GUIDE (cont’d)

DIFFERENTIAL PRESSURE (MAX)	TENSILE LOAD THRU TOOL (MAX)
10,000 PSI	154,334 LBS

D) PRE-INSTALLATION INSPECTION PROCEDURES

CAUTION$_1$: D&L ships tool connections made-up **HAND TIGHT**—labeled with hand-tight tape on the tool (Fig. 1) — unless stated otherwise. Tighten/torque all connections properly before operating tool.

Fig. 1

GENERAL THREAD CONNECTION TORQUE RECOMMENDATIONS			
STUB ACME / ACME THREADS	INTERNAL TAPERED TUBING THREADS		PREMIUM THREADS
	UP TO 2-3/8”	GREATER THAN 2-3/8”	
600 – 800 FT-LBS	600 – 800 FT-LBS	800 – 1,200 FT-LBS	Consult thread manufacturer’s recommendations.

GENERAL SCREW TORQUE RECOMMENDATIONS									
SCREW SIZE (INCHES)	#6	#8	#10	1/4	5/16	3/8	7/16	1/2	5/8 and larger
TORQUE RANGE (INCH-POUNDS)	5 – 8	10 – 15	18 – 25	25 – 40	50 – 80	90 – 135	160 – 210	250 – 330	450 - 650

Before first use, D&L recommends disassembly and inspection of the tools unless stated otherwise. Ensure parts have not been damaged during shipping. Replace damaged parts with D&L replacement parts. Contact D&L sales for replacement part information.

Re-assemble the tool after inspection. Install parts in the correct order and orientation. Properly tighten connections.

Before re-using the tool, D&L recommends disassembly and inspection of the tool. Clean parts and ensure parts are in good working condition. Replace worn or damaged parts with D&L replacement parts.

When redressing the tool, D&L recommends replacement of all seals, elements, o-rings, shear screws, etc. Contact D&L sales for redress kit and/or other part information.

E) RELEASING PROCEDURES

Set down weight on the packer and rotate the work string 1/4 turn to the right at the packer and pick up while holding right-hand torque. The internal by-pass will open, allowing pressure to equalize. After pressure is equalized, continue to pick up to release the upper slips, relax the elements and release the lower slips.

CAUTION$_2$: High differential pressure below the VSI-X may cause the upper slips to wedge in tighter, requiring an extra amount of tension to release the upper slips.

F) STORAGE RECOMMENDATIONS

When preparing the tool for storage, follow the Pre-Installation Inspection Procedures. Re-assemble the tool with connections hand-tight only and in running position if applicable. Elements should be in a relaxed state—free from tension, compression and other stresses that could cause deformation.

Store the tool, if possible, in an enclosed, temperature and humidity controlled environment. Avoid excessively high temperatures over long periods of time. Shield elastomeric parts from ultraviolet light sources. Keep tool dry and protected from condensation. Do not store in contact with or near volatile or corrosive chemicals. Do not store near ozone generating equipment or operations such as welding.

G) PRESSURE AFFECTED AREA GUIDE

When set downhole, the packer mandrel is subjected to a force created by differential pressure above or below the packer that acts on the pressure affected area (i.e., the piston effect). Depending on the tubing size and weight and the seal area of the packer the force created by differential pressure acts upwards or downwards on the packer mandrel. An upward force, designated as a negative (-) value, acts to push the packer mandrel up hole and must be accounted for to ensure that the packer remains set. A downward force, designated as a positive value, acts to push the packer mandrel down hole and must be accounted for when releasing the packer. Other factors (e.g., tubing movement due to temperature change) must be considered separately to determine all the forces acting on the packer.

PACKER SIZE (INCHES)	**TUBING SIZE** (INCHES)	**PRESSURE AFFECTED AREA** (SQ. INCHES)	
		ABOVE	**BELOW**
7	2.375	6.43 (DOWN)	-7.74 (UP)
	2.875	4.37 (DOWN)	6.18 (UP)
	3.500	1.24 (UP)	3.83 (UP)

Example: Consider a 7” VSI-X Packer set on 2.875 tubing with a differential pressure of 3,000 psi in the annulus around the tubing above the packer. What is the force acting on the seal area of the mandrel?

To calculate the force (lbs) acting on the seal area of the mandrel, refer to the Pressure Affected Area Guide for a 7” VSI-X Packer run on 2.875 tubing. In this example, the differential pressure from above the packer acts on the seal area of the packer mandrel across a pressure affected area of 4.37 in^2. Multiplying the differential pressure (3,000 psi) by the pressure affected area (4.37 in^2) results in a force of 13,110 lbs. The piston effect on the packer mandrel is a downward force of 13,110 lbs.

H) ELASTOMER TRIM TEMPERATURE GUIDE

NITRILE (STD)			
TEMPERATURE RANGE (F°)	**DUROMETER**		
	END	**MIDDLE**	**END**
40° - 125°	80	70	80
125° - 250°	90	70	90
150° - 250°	90	80	90
250° +	Contact D&L Sales		

RUBBER TYPE	**TEMPERATURE RANGE** (F°)
NITRILE	40° - 250°F
HSN (HNBR)	70° - 300°F
VITON	100° - 350°F

I) RECOMMENDED TOOLS

I-1) HAND TOOLS

- VISE
- GLOVES
- ALLEN WRENCHES
- TAPE MEASURE
- O-RING PICK
- BAR
  - 1/2-INCH
  - 3/4-INCH
- PAINT BRUSH, 2-INCH
- PIPE WRENCH, 3-FT (2 EA)
- “CHEATER” PIPE, 4-FT LONG
- ADJUSTABLE WRENCH, 12-INCH
- CORDLESS DRILL, 18V
- SNAP RING SPREADER PLIERS
- ALIGNING PUNCH
- SCREWDRIVER SET, FLAT-TIPPED
- SOCKET SETS
  - 3/8-INCH DRIVE
  - 1/2-INCH DRIVE
- HAMMERS
  - SLEDGE
  - BALL PEEN
  - DEAD BLOW

I) RECOMMENDED TOOLS (cont’d)

I-2) SPECIAL TOOLS

ITEM	QTY	DESCRIPTION	PART NUMBER
T1	1	ASSEMBLY TOOL FOR 4-1/2” - 7-5/8” VSI-XW	AT100

J) DISASSEMBLY

J-1) Clamp spring cage (5) in vise.

J-1.1) Unscrew and remove shear screws (3) from J-body (20).

J-1.2) Unscrew and remove bottom nipple (28) from J-pin bottom sub (23).

J-1.3) Unscrew and remove set screws (31) from J-pin bottom sub (23). Move J-body (20) as needed to access set screws (31).

J-1.4) Unscrew and remove J-pin bottom sub (23) from inner mandrel (2).

NOTE$_5$: Drag block body assembly must be free to rotate.

J-1.4.1) Remove o-ring (34) from J-pin bottom sub (23).

J-1.5) Unscrew and remove set screws (32) from J-body (20).

J-1.6) Unscrew and remove J-body (20) from drag block body (18) (**NOTE$_6$**: Left-hand threads).

J-1.7) Remove drag block retainer (21) from drag block body (18).

J-1.8) Unscrew and remove rubber mandrel cap (19) from rubber mandrel (11).

NOTE$_7$: For added leverage, insert a rod through rubber retainer (15) and rubber mandrel (11) as needed.

J-1.9) Wedge lower slips (17) outwards (if needed). Remove drag block body assembly and disassemble:

J-1.9.1) Remove lower slips (17) and lower slip springs (25) from drag block body (18).

J-1.10) Unscrew and remove lower cone (16) from rubber retainer (15).

J-1.11) Unscrew rubber mandrel (11) from center coupling (10).

NOTE$_8$: For added leverage, insert a rod through upper cone (9) as needed.

J-1.12) Remove rubber mandrel assembly and disassemble:

J-1.12.1) Remove elements (13, 14), rubber spacers (12) and rubber retainer (15) from rubber mandrel (11).

J-1.12.2) Unscrew and remove gage ring (29) from rubber retainer (15).

J-1.13) Unscrew and remove gage ring (29) from center coupling (10).

J-1.14) Unscrew and remove center coupling (10) from upper cone (9).

J-1.14.1) Remove bonded seal (24) and o-ring (35) from center coupling (10).

J-1.14.1.1) Remove o-ring (33) from bonded seal (24).

J-1.15) Remove bearing bushing (30) and upper cone (9) from inner mandrel (2).

J-1.16) Wedge slips (7 and 8) outwards (if needed). Unscrew and remove inner mandrel (2) from top sub (1).

J-1.17) Remove releasing slip (7), upper slips (8) and upper slip springs (26) from upper slip body (6).

J) DISASSEMBLY (cont’d)

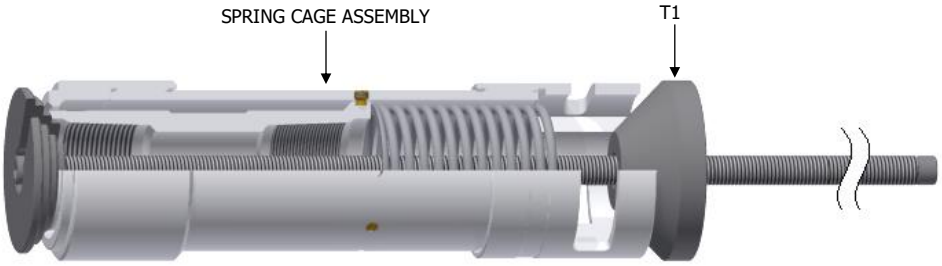

Fig. 2

J-1.18) Disassemble spring cage assembly:

J-1.18.1) Position assembly tool (T1) hand-tight against top sub (1) and upper slip body (6) of spring cage assembly (Fig. 2).

CAUTION$_3$: Compression spring (4) is compressed with tension against spring cage assembly.

J-1.18.2) Unscrew and remove shear screws (3) from spring cage (5).

J-1.18.3) Release compression spring (4) tension by loosening assembly tool (T1) until enough space exists between stepped cone of assembly tool (5) and spring cage cap (27) for spring cage cap (27) to be unscrewed from spring cage (5).

J-1.18.4) Unscrew spring cage cap (27) from spring cage (5).

J-1.18.5) Release compression spring (4) tension by loosening assembly tool (T1). Remove tool from assembly.

J-1.18.6) Remove spring cage cap (27), top sub (1), and compression spring (4) from spring cage (5).

J-1.18.7) Unscrew and remove upper slip body (6) from spring cage (5)

J-1.18.8) Remove spring retainer ring (22) from upper slip body (6).

J-2) Unclamp and remove spring cage (5) from vise.

K) ASSEMBLY

NOTE$_9$: Clean and inspect all parts. Replace all worn and damaged parts. Install parts in proper order, and orientation and tighten/torque all connections properly.

CAUTION$_4$: To ensure tool operates properly, install o-rings in o-ring grooves **NOT** thread reliefs (Fig 3).

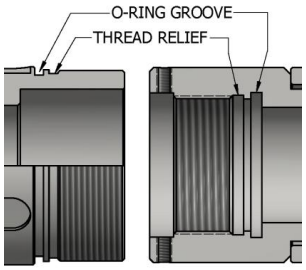

Fig. 3

K-1) Clamp spring cage (5) in vise.

K-1.1) Assemble spring cage assembly:

K-1.1.1) Install spring retainer ring (22) into upper slip body (6).

K-1.1.2) Screw upper slip body (6) onto spring cage (5).

K-1.1.3) Install compression spring (4) and top sub (1) into spring cage (5).

K-1.1.4) Screw spring cage cap (27) into spring cage (5).

NOTE$_{10}$: Press down top sub (1) to compress compression spring (4) as necessary.

K) ASSEMBLY (cont’d)

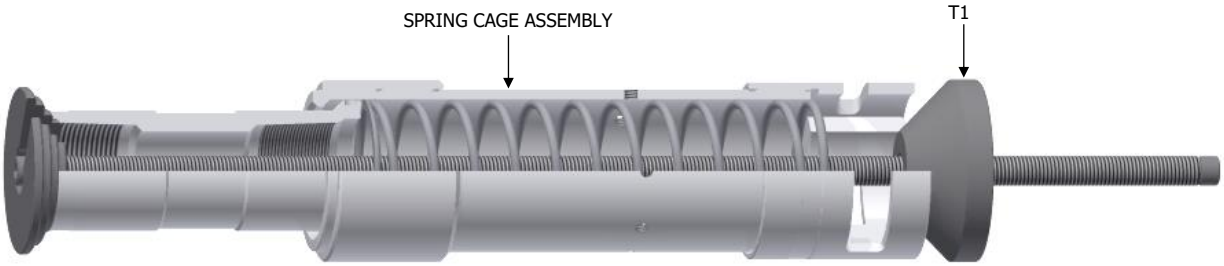

Fig. 4

K-1.1.5) Compress compression spring (4) with assembly tool (T1) (Fig. 4).

K-1.1.6) Align threaded holes in spring cage (5) with recessed holes in top sub (1). Screw shear screws (3) into spring cage (5). Tighten until shear screws (3) make contact with top sub (1). Back shear screws (3) out 1/4 turn.

K-1.1.7) Remove assembly tool (T1) from spring cage assembly.

CAUTION$_3$: Compression spring (4) is compressed with tension against spring cage assembly.

K-1.1.8) Install upper slips (8), releasing slip (7) and upper slip springs (26) into upper slip body (6). Wedge releasing slip (7) and upper slips (8) outwards.

NOTE$_{11}$: Install two (2ea) springs per slip (Fig. 5).

K-1.2) Screw inner mandrel (2) into top sub (1). Remove wedges.

K-1.3) Install bearing bushing (30) into upper cone (9).

K-1.4) Install upper cone (9) and bearing bushing (30) onto inner mandrel (2). Slide upper cone (9) until bearing bushing (30) comes into contact with shoulder of inner mandrel (2) (Refer to Technical Drawing Detail A).

K-1.5) Install o-ring (33) into o-ring groove in bonded seal (24).

K-1.6) Install bonded seal (24) into center coupling (10).

CAUTION$_5$: Do not rip or tear o-ring during installation.

K-1.7) Install o-ring (35) into o-ring groove in center coupling (10).

K-1.8) Screw center coupling (10) onto upper cone (9).

NOTE$_8$: For added leverage, insert a rod through upper cone (9) as needed.

CAUTION$_6$: Do not damage seal during installation.

K-1.9) Screw gage ring (29) onto center coupling (10).

K-1.10) Assemble rubber mandrel assembly and install:

K-1.10.1) Screw gage ring (29) onto rubber retainer (15).

K-1.10.2) Install rubber retainer (15), elements (13, 14), and rubber spacers (12) onto rubber mandrel (11).

K-1.10.3) Install rubber mandrel assembly onto inner mandrel (2). Screw rubber mandrel (11) into center coupling (10).

CAUTION$_5$: Do not rip or tear o-ring during installation.

K-1.11) Screw lower cone (16) into rubber retainer (15).

K-1.12) Assemble drag block body assembly and install:

K-1.12.1) Install lower slips (17) and lower slip springs (25) into drag block body (18).

NOTE$_{12}$: Install two (2ea) springs per slip (Fig. 6).

K-1.12.2) Wedge lower slips (17) outwards. Install drag block body assembly onto rubber mandrel (11).

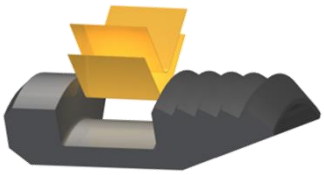

Fig. 5

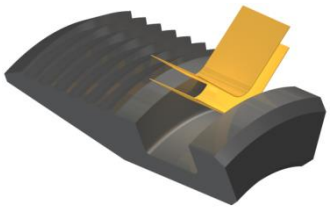

Fig. 6

K) ASSEMBLY (cont’d)

K-1.13) Remove wedges. Screw rubber mandrel cap (19) onto rubber mandrel (11).

NOTE7: For added leverage, insert a rod through rubber retainer (15) and rubber mandrel (11) as needed.

K-1.14) Install drag block retainer (21) onto drag block body (18).

K-1.15) Screw J-body (20) onto drag block body (18) (**NOTE6**: Left-hand threads).

K-1.16) Screw set screws (32) into J-body (20).

K-1.17) Install o-ring (34) into o-ring groove in J-pin bottom sub (23).

K-1.18) Screw J-pin bottom sub (23) onto inner mandrel (2).

CAUTION5: Do not rip or tear o-ring during installation.

NOTE5: Drag block body assembly must be free to rotate.

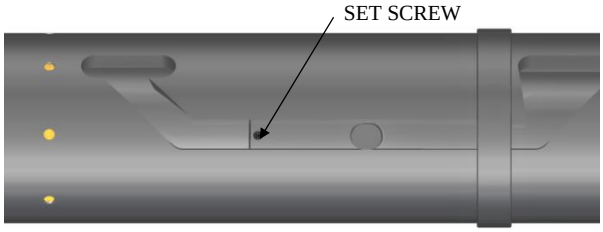

Fig. 7

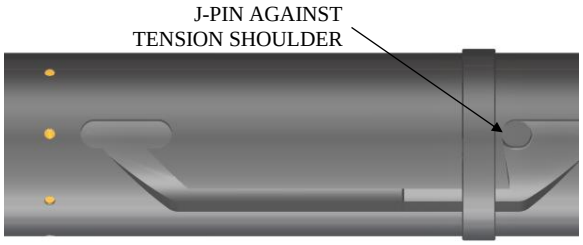

Fig. 8

K-1.19) Rotate J-body (20) as needed to position J-pin of J-pin bottom sub (23) along J-slot to access threaded holes (Fig. 7). Screw set screw (31) into J-pin bottom sub (23).

K-1.20) Position J-pin of J-pin bottom sub (23) on tension shoulder in J-slot of J-body (20) (Fig. 8).

K-1.21) Align threaded holes in J-body (20) with pocket holes in rubber mandrel cap (19).

K-1.22) Screw shear screws (3) into J-body (20). Tighten until shear screws (3) make contact with rubber mandrel cap (19). Back shear screws (3) out 1/4 turn.

K-1.23) Screw bottom nipple (28) into J-pin bottom sub (23).

K-2) Unclamp spring cage (5) from vise and remove assembled tool.

L) PARTS LIST

ITEM	QTY	DESCRIPTION	MATERIAL	P/N 60173HT	P/N 60174HT
1	1	TOP SUB	DLMS110	60173610HT	
2	1	INNER MANDREL	DLMS110	60373210HT	
3	16	SHEAR SCREW (2375#)	DLM360BRS	60100990	
4	1	COMPRESSION SPRING	DLMCRSP	60373920	
5	1	SPRING CAGE	DLMS60	60174310	
6	1	UPPER SLIP BODY	-	60073320HT	
7	1	RELEASING SLIP	DLMS110	60073125	
8	2	UPPER SLIP	DLMS35	60073115	
9	1	UPPER CONE	DLMS110	60373410HT	
10	1	CENTER COUPLING	DLMS80	60273620	
11	1	RUBBER MANDREL	DLMS60	60073220	
12	2	RUBBER SPACER	DLMS35	60273840	60274840

L) PARTS LIST (cont’d)

ITEM	QTY	DESCRIPTION	MATERIAL	P/N 60173HT	P/N 60174HT
13	1	ELEMENT	80 DURO NITRILE	60273512	60274512
14	2	ELEMENT	90 DURO NITRILE	60273513	60274513
15	1	RUBBER RETAINER	DLMS60	60273850	
16	1	LOWER CONE	DLMS110	60073420HT	
17	4	LOWER SLIP	DLMS35	60073135	
18	1	DRAG BLOCK BODY	DLMS35	60073335	
19	1	RUBBER MANDREL CAP	DLMS60	60173230	
20	1	J-BODY	DLMS60	60173340HT	
21	1	DRAG BLOCK RETAINER	DLMS60	60073910	
22	1	SPRING RETAINER RING	DLMS60	60073820	
23	1	J-PIN BOTTOM SUB	DLMS110	60373634HT	
24	1	BONDED SEAL	DLMS60 / 90 DURO NITRILE	60073520	
25	8	LOWER SLIP SPRING	-	7170901	
26	6	UPPER SLIP SPRING	-	7170902	
27	1	SPRING CAGE CAP	DLMS60	60174810	
28	1	BOTTOM NIPPLE	DLMS80	60373636	
29	2	GAGE RING	DLMS60	60273830	60274830
30	1	BEARING BUSHING	DLMS35	60373224	
31	2	SET SCREW 1/4-20 UNC X 3/8	STEEL	SSS025C037	
32	3	SET SCREW 3/8-16 UNC X 3/8	STEEL	SSS037C037	
33	1	155 O-RING	90 DURO NITRILE	90155	
34	1	237 O-RING	90 DURO NITRILE	90237	
35	1	243 O-RING	90 DURO NITRILE	90243	
36	8	SHEAR SCREW (5500# EA) 1/2-13 UNC X 7/16	DLM360BRS	BSSSLT050C043*	

*Refer to WLAK technical manual for placement.

REDRESS KIT (RDK)		60173050HT	60174050HT
ASSEMBLED WEIGHT		314 LBS	315 LBS

L) PARTS LIST (cont’d)

L-1) ELASTOMER TRIM OPTIONS

NOTE13: For temperature range, refer to Elastomer Trim Temperature Guide.

L-1.1) HSN

ITEM	QTY	DESCRIPTION	MATERIAL	P/N 60173HTH	P/N 60174HTH
13	1	ELEMENT	80 DURO HSN	60273512H	60274512H
14	2	ELEMENT	90 DURO HSN	60273513H	60274513H
24	1	BONDED SEAL	90 DURO HSN	60073520H	
33	1	155 O-RING	90 DURO HSN	90155H	
34	1	237 O-RING	90 DURO HSN	90237H	
35	1	243 O-RING	90 DURO HSN	90243H	

REDRESS KIT (RDK)		60173050HTH	60174050HTH

L-1.2) VITON

ITEM	QTY	DESCRIPTION	MATERIAL	P/N 60173HTV	P/N 60174HTV
13	1	ELEMENT	80 DURO VITON	60273512V	60274512V
14	2	ELEMENT	90 DURO VITON	60273513V	60274513V
24	1	BONDED SEAL	90 DURO VITON	60073520V	
33	1	155 O-RING	90 DURO VITON	90155V	
34	1	237 O-RING	90 DURO VITON	90237V	
35	1	243 O-RING	90 DURO VITON	90243V	

REDRESS KIT (RDK)		60173050HTV	60174050HTV

L-2) CARBIDE OPTIONS

ITEM	QTY	DESCRIPTION	MATERIAL	P/N 60173HTC	P/N 60174HTC
8	2	CARBIDE UPPER SLIP	DLMS110	60073115C	
17	4	CARBIDE LOWER SLIP	DLMS110	60073135C	

M) TECHNICAL ILLUSTRATION

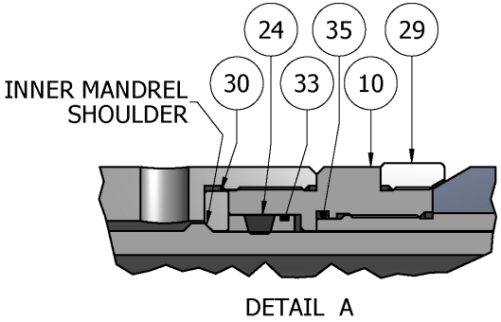

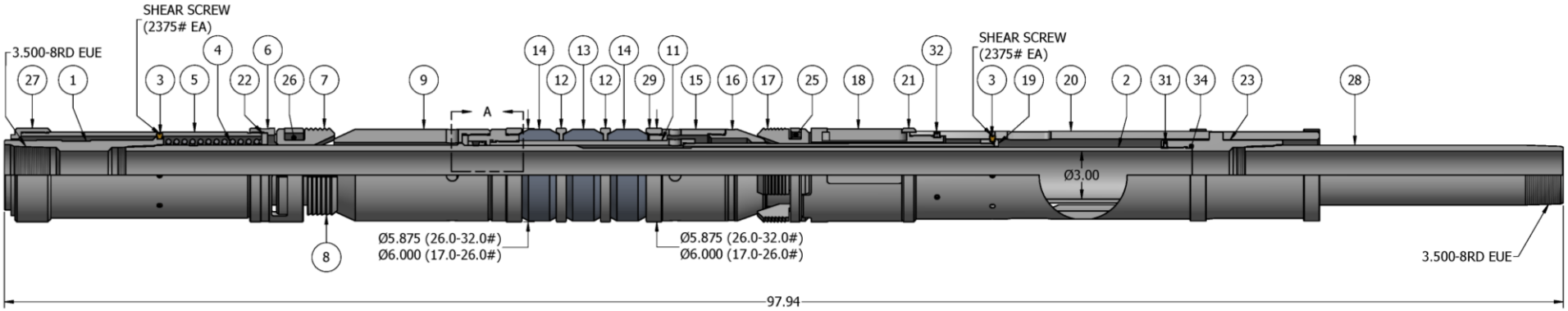

N) REVISION HISTORY

DATE	REVISION	DESCRIPTION OF CHANGES	REVISED BY	APPROVED BY
07/29/2022	E	Added carbide options, screw torque recommendations; removed drift ID; revised trim temp. ratings, P/N 60373410HT was 60373410	J.Anderson	E.Visaez
01/07/15	D	Revised P/N 60373636 material L-80 was 1026, Elastomer Trim Temperature Guide was Element Selection Guide; Added related tools, drift ID to specifications guide, note for use of double hook J-slot packers, tensile load max, pre-installation inspection procedures, storage procedure and figures 3, 5, 6, 7 and 8 to assembly instructions.	D.Barlow	J.McArthur
01/03/13	C	Revised technical illustration; Removed emergency release instructions from releasing procedures section, AFLAS from element selection guide; Added recommended tools, setting kit and revision history sections, P/N BSSSLT050C043; Rewrote disassembly and assembly instructions	J.Anderson	K.Plunkett