A) DESCRIPTION

The HD Retrievable Packer is a heavy duty service packer ideally suited for all types of squeeze cementing, formation fracturing, high pressure acidizing, etc. It is a large opening compression set packer with hydraulic button-type hold down. This packer withstands high pressure from above or below and uses a 3-element packing system, J-slot, and a drag block mechanism for easy setting. This packer has a built-in unloader which circulates across the hydraulic hold down buttons to improve retrievability and run in performance.

B) SPECIFICATION GUIDE

CASING			TOOL			
SIZE (INCHES)	**WEIGHT** (LBS/FT)	**RECOMMENDED HOLE SIZE** (INCHES)	**GAGE OD** (INCHES)	**NOMINAL ID** (INCHES)	**THREAD CONNECTIONS** BOX UP / PIN DOWN	**PART NUMBER**
6-5/8	32.0 – 35.0#	5.575 – 5.675	5.375	2.00	2-3/8 EUE	61366RS 61366RSH[1] 61366RSV[2]
	36.7 – 40.2#	Refer to 6" (17.0 – 20.0#) casing - tech manual no.: DL-613-6000-367				

Elastomer Trim Options: [1]HSN, [2]Viton

NOTE$_1$: Tools listed are right-hand auto set / straight pick-up.

NOTE$_2$: For 6-5/8" (36.7 - 40.2#) casing – use 6" (17.0-20.0#) casing.

DIFFERENTIAL PRESSURE (MAX)	TENSILE LOAD THRU UNSET TOOL (MAX)	HANGING WEIGHT ON SET TOOL (MAX)*	TORQUE THRU TOOL (MAX)
10,000 PSI	73,500 LBS	73,500 LBS *	2,000 FT-LBS

*Casing must be cemented for this load rating.

CAUTION$_1$: Before running the tool, check the pressure affected areas chart and consider other effects to be certain that the unloader will remain closed during operation.

CAUTION$_2$: If the HD Packer is run with a retrievable bridge plug, make sure the bridge plug J-slot is compatible with the J-slot on the packer. Whichever direction you set the plug, the packer should set in the **opposite** direction.

C) PRE-INSTALLATION INSPECTION PROCEDURES

CAUTION$_3$: D&L ships tool connections made-up hand-tight—labeled with hand-tight tape on the tool—unless stated otherwise. Properly tighten connections before operating tool (Fig. 1).

Fig. 1

GENERAL THREAD CONNECTION TORQUE RECOMMENDATIONS			
STUB ACME / ACME THREADS	**INTERNAL TAPERED TUBING THREADS**		**PREMIUM THREADS**
	UP TO 2-3/8"	**GREATER THAN 2-3/8"**	
600 – 800 FT-LBS	600 – 800 FT-LBS	800 – 1,200 FT-LBS	Consult thread manufacturer's recommendations.

Before first use, D&L recommends disassembly and inspection of the tool unless stated otherwise. Ensure parts have not been damaged during shipping. Replace damaged parts with D&L replacement parts. Contact D&L sales for replacement part information.

Re-assemble the tool after inspection. Install parts in the correct order and orientation. Properly tighten connections.

Before re-using the tool, D&L recommends disassembly and inspection of the tool. Clean parts and ensure parts are in good working condition. Replace worn or damaged parts with D&L replacement parts.

When redressing the tool, D&L recommends replacement of all seals, elements, o-rings, shear screws, etc. Contact D&L sales for redress kit and/or other replacement part information.

D) SETTING PROCEDURES

CAUTION$_4$: Do not run the tool without properly tightening connections. Running the tool with loose connections may damage the tool and cause malfunction.

Run to setting depth. The unloader remains open while running in. Pick up the work string and rotate 1/4 left-hand turn at the packer. Slack off weight and set down on the packer to set the slips, close the unloader and compress the packing elements. A minimum weight of 15,000 lbs. at the packer is required to pack off the elements.

CAUTION$_5$: Run the tool slowly, as with any hold down type packer, to help prevent dulling of the hydraulic buttons.

E) RELEASING PROCEDURES

Pick up on the work string to open the unloader, allowing time for the tubing and casing pressure to equalize. Refer to Pressure Affected Area Guide to determine weight in addition to pipe weight required to pick up on packer. Continued upward movement of the work string unsets the slips, relaxes the packing elements and re-jays the packer. The tool may now be moved and reset, or pulled from the well.

F) STORAGE RECOMMENDATIONS

When preparing the tool for storage, follow the Pre-Installation Inspection Procedures. Re-assemble the tool with connections hand-tight only and in running position if applicable. Elastomers should be in a relaxed state—free from tension, compression, and other stresses that could cause deformation.

Store the tool, if possible, in an enclosed, temperature and humidity controlled environment. Avoid excessively high temperatures over long periods of time. Shield elastomeric parts from ultraviolet light sources. Keep tool dry and protected from condensation. Do not store in contact with or near volatile or corrosive chemicals. Do not store near ozone generating equipment or operations (such as welding).

G) PRESSURE AFFECTED AREA GUIDE

When set downhole, the packer mandrel is subjected to a force created by differential pressure above or below the packer that acts on the pressure affected area (i.e., the piston effect). Depending on the tubing size and weight and the seal area of the packer the force created by differential pressure acts upwards or downwards on the packer mandrel. An upward force, designated as a negative (-) value, acts to push the packer mandrel up hole and must be accounted for to ensure that the packer remains set. A downward force, designated as a positive value, acts to push the packer mandrel down hole and must be accounted for when releasing the packer. Other factors (e.g., tubing movement due to temperature change) must be considered separately to determine all the forces acting on the packer.

PACKER SIZE (IN)	TUBING TO PACKER			PRESSURE AFFECTED AREA (IN^2)			
	SIZE (IN)	WEIGHT (LBS/FT)	ID (IN)	ABOVE		BELOW	
6-5/8	1.900	2.40	1.650	4.358	(DOWN)	1.345	(DOWN)
		2.90	1.610	4.358	(DOWN)	1.243	(DOWN)
	2.375	4.00	2.041	2.764	(DOWN)	2.479	(DOWN)
		4.70	1.995	2.764	(DOWN)	2.333	(DOWN)
		5.95	1.867	2.764	(DOWN)	1.944	(DOWN)
	2.875	6.50	2.441	0.702	(DOWN)	3.887	(DOWN)
		7.90	2.323	0.702	(DOWN)	3.445	(DOWN)
		8.70	2.259	0.702	(DOWN)	3.215	(DOWN)
	3.500	7.70	3.068	-2.427	(UP)	6.599	(DOWN)
		9.30	2.992	-2.427	(UP)	6.238	(DOWN)
		10.20	2.922	-2.427	(UP)	5.913	(DOWN)
		12.95	2.750	-2.427	(UP)	5.146	(DOWN)
	4.000	9.50	3.548	-5.373	(UP)	9.094	(DOWN)
		11.00	3.476	-5.373	(UP)	8.696	(DOWN)
	4.500	12.75	3.958	-8.711	(UP)	11.511	(DOWN)

Example: Consider a 6-5/8" X 2-3/8" HD Packer set on 2.375" (4.70 lbs/ft) tubing with a differential pressure of 3,000 PSI in the annulus around the tubing above the packer. What is the force acting on the seal area of the mandrel?

To calculate the force (lbs) acting on the seal area of the mandrel, refer to the Pressure Affected Area Guide for a 6-5/8" X 2-3/8" HD Packer run on 2.375" (4.70 lbs/ft) tubing. In this example, the differential pressure from above the packer acts on the seal area of the packer mandrel across a pressure affected area of 2.764 in^2. Multiplying the differential pressure (3,000 PSI) by the pressure affected area (2.764 in^2) results in a force of 8,292 lbs. The piston effect on the packer mandrel is a downward force of 8,292 lbs.

H) ELASTOMER TRIM TEMPERATURE GUIDE

NITRILE (STD)			
TEMPERATURE RANGE (F°)	DUROMETER		
	END	MIDDLE	END
70° - 125°	80	70	80
125° - 250°	90	70	90
150° - 250°	90	80	90
250° +	Contact D&L Sales		

RUBBER TYPE	TEMPERATURE RANGE
NITRILE	70° - 250°F
HSN (HNBR)	70° - 300°F
VITON	100° - 350°F

I) RECOMMENDED TOOLS

I-1) HAND TOOLS

- VISE
- GLOVES
- ALLEN WRENCHES
- TAPE MEASURE
- O-RING PICK
- BAR
  - 1/2-INCH
  - 3/4-INCH
- PAINT BRUSH, 2-INCH
- PIPE WRENCH, 3-FT (2 EA)
- "CHEATER" PIPE, 4-FT LONG
- ADJUSTABLE WRENCH, 12-INCH
- CORDLESS DRILL, 18V
- SNAP RING SPREADER PLIERS
- ALIGNING PUNCH
- SCREWDRIVER SET, FLAT-TIPPED
- SOCKET SETS
  - 3/8-INCH DRIVE
  - 1/2-INCH DRIVE
- HAMMERS
  - SLEDGE
  - BALL PEEN
  - DEAD BLOW

I-2) SPECIAL TOOLS

ITEM	QTY	DESCRIPTION	PART NUMBER
T1	1	DRAG BLOCK ASSEMBLY TOOL	AT070110
T2	1	BUTTON REMOVAL TOOL	AT-BRT000
T3	1 GAL	KOPR-KOTE® ANTI-SEIZE LUBRICANT	DL-KOPR-KOTE-1G

J) DISASSEMBLY

J-1) Clamp top sub (1) in vise.

J-1.1) Unscrew and remove set screws (37) from J-pin bottom sub (23). Move J-body (20) as needed to access set screws (31).

J-1.2) Unscrew and remove J-pin bottom sub (23) from inner mandrel (2).

NOTE$_3$: Drag block body assembly must be free to rotate.

J-1.2.1) Remove o-ring (39) from J-pin bottom sub (23).

J-1.3) Compress drag blocks (22) with drag block assembly tool (T1).

J-1.4) Unscrew and remove set screws (35) from J-body (20).

J-1.5) Unscrew and remove J-body (20) from drag block body (18) (**NOTE$_4$**: Left-hand threads).

J-1.6) Remove drag block retainer (21) from drag block body (18).

J-1.7) Release drag blocks (22). Remove drag blocks (22) and drag block springs (3) from drag block body (18).

J-1.8) Unscrew and remove rubber mandrel cap (19) from rubber mandrel (11).

NOTE$_5$: For added leverage, insert a rod through rubber retainer (15) and rubber mandrel (11) as needed.

J-1.9) Remove drag block body assembly and disassemble:

J-1.9.1) Unscrew and remove socket cap screw (34) from drag block body (18).

J-1.9.2) Wedge lower slips (17) outward (if needed). Remove lower slip support (32) from drag block body (18).

J-1.9.3) Remove wedges (if needed). Remove lower slips (17) and lower slip springs (25) from drag block body (18).

J-1.10) Unscrew and remove lower cone (16) from rubber retainer (15).

NOTE$_6$: For added leverage, insert a rod through central body (10) as needed.

J-1.11) Unscrew rubber mandrel (11) from valve body (29).

J-1.12) Remove rubber mandrel assembly and disassemble:

J-1.12.1) Remove elements (13, 14), rubber spacers (12) and rubber retainer (15) from rubber mandrel (11).

J-1.13) Unscrew and remove valve body (29) from central body (10).

J-1.13.1) Remove o-ring (41) from valve body (29).

J) DISASSEMBLY (cont'd)

J-1.14) Unscrew and remove central body (10) from hold down body (6).

J-2) Unclamp and remove top sub (1) from vise. Clamp lower end of inner mandrel (2) in vise.

CAUTION$_6$: Do NOT wrench or clamp on seal surface.

J-2.1) Unscrew and remove set screws (36) from top sub (1).

J-2.2) Unscrew and remove top sub (1) from inner mandrel (2).

J-2.2.1) Remove o-ring (40) from top sub (1).

J-2.3) Unscrew and remove hold down extension (7) from hold down body (6).

J-2.3.1) Remove o-ring (44) from hold down extension (7).

J-2.4) Move lower strap retainer (28) downwards temporarily out of way.

J-2.5) Unscrew and remove hold down cap (4) from hold down body (6).

J-2.6) Unscrew and remove flat head cap screws (33) from hold down body (6).

J-2.7) Remove hold down straps (31) from hold down body (6).

J-2.8) Remove hold down button springs (26) from hydraulic hold down buttons (30).

J-2.9) Remove hydraulic hold down buttons (30) from hold down body (6) with button removal tool (T2).

J-2.9.1) Remove o-rings (38) from hydraulic hold down buttons (30).

J-2.10) Remove hold down body (6) from inner mandrel (2).

J-2.10.1) Remove o-rings (42, 43) from hold down body (6).

J-2.11) Remove lower strap retainer (28) from inner mandrel (2).

J-2.12) Unscrew and remove compensating mandrel (8) from seal receptacle (5).

CAUTION$_6$: Do NOT wrench or clamp on seal surface.

J-2.13) Remove compensating piston (9) from compensating mandrel (8).

J-2.13.1) Remove o-rings (45, 46) from compensating piston (9).

J-3) Unclamp and remove inner mandrel (2) from vise.

J-3.1) Remove seal receptacle (5) from inner mandrel (2).

J-3.1.1) Unscrew and remove seal retainer (27) from seal receptacle (5).

J-3.1.2) Remove o-rings (41, 42) from seal receptacle (5).

J-3.1.3) Remove quad seal (24) from seal retainer (27).

K) ASSEMBLY

NOTE$_7$: Clean and inspect all parts. Replace all worn and damaged parts. Install parts in proper order, orientation and tighten/torque all connections properly.

CAUTION$_7$: To ensure tool operates properly, install o-rings in o-ring grooves **NOT** thread reliefs (Fig. 2).

NOTE$_8$: Apply KOPR-KOTE® anti-seize lubricant (T3) on STUB ACME and drill pipe connections when making up connections.

K-1) Assemble seal receptacle assembly and install:

K-1.1) Install quad seal (24) in groove in seal retainer (27).

K-1.2) Install o-rings (41, 42) in o-ring grooves in seal receptacle (5).

K-1.3) Screw seal retainer (27) onto seal receptacle (5).

CAUTION$_8$: Do not rip or tear quad seal during installation.

K-1.4) Install seal receptacle (5) and assembly onto inner mandrel (2).

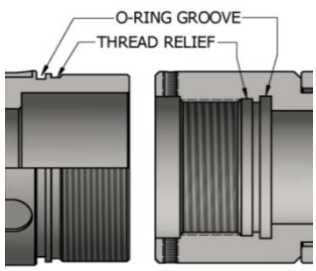

Fig. 2

K) ASSEMBLY (cont'd)

K-2) Clamp lower end of inner mandrel (2) in vise.

CAUTION$_6$: Do NOT wrench or clamp on seal surface.

K-2.1) Assemble compensating mandrel assembly and install:

K-2.1.1) Install o-rings (45, 46) into o-ring grooves in compensating piston (9).

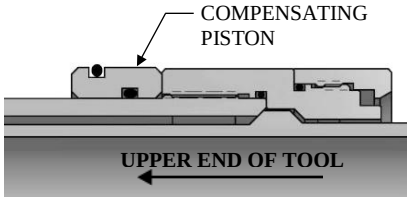

Fig. 3

K-2.1.2) Install compensating piston (9) onto compensating mandrel (8).

NOTE$_9$: Compensating piston MUST be installed in correct direction (Fig. 3).

CAUTION$_9$: Do not rip or tear o-ring during installation.

K-2.1.3) Screw compensating mandrel (8) into seal receptacle (5).

CAUTION$_9$: Do not rip or tear o-ring during installation.

K-2.2) Place strap retainer (28) onto inner mandrel (2) – it will be installed in later step.

K-2.3) Assemble hold down body assembly and install:

K-2.3.1) Install o-rings (42, 43) into o-ring grooves in hold down body (6).

K-2.3.2) Install hold down body (6) onto inner mandrel (2).

Fig. 4

K-2.4) Assemble hydraulic hold down buttons and install:

K-2.4.1) Install o-rings (38) into o-ring grooves in hydraulic hold down buttons (30).

K-2.4.2) Install hydraulic hold down buttons (30) into hold down body (6) (Fig. 4).

CAUTION$_9$: Do not rip or tear o-rings during installation.

K-2.4.3) Align slots in hydraulic hold down buttons (30) with slot in hold down body (6). Install hold down button springs (26) into hydraulic hold down buttons (30).

NOTE$_{10}$: Install two (2ea) hold down button springs per hydraulic hold down button (Fig. 5).

K-2.4.4) Set hold down straps (31) in slots in hydraulic hold down buttons (30) and hold down body (6) (Fig. 5).

K-2.4.5) Screw flat head cap screws (33) into hold down body (6) securing hold down straps (31) (Fig. 5).

Fig. 5

K-2.5) Install strap retainer (28) onto hold down body (6) capturing lower ends of hold down straps (31).

K-2.6) Screw hold down cap (4) onto hold down body (6) capturing upper ends of hold down straps (31).

K-2.7) Install o-ring (44) in o-ring groove in hold down extension (7).

K-2.8) Screw hold down extension (7) into hold down body (6).

K-2.9) Install o-ring (40) into o-ring groove in top sub (1).

K-2.10) Screw top sub (1) onto inner mandrel (2).

CAUTION$_9$: Do not rip or tear o-ring during installation.

K-2.11) Screw set screws (36) into top sub (1).

K-3) Unclamp and remove inner mandrel (2) from vise. Clamp top sub (1) in vise.

K-3.1) Screw central body (10) onto hold down body (6).

CAUTION$_9$: Do not rip or tear o-ring during installation.

K-3.2) Install o-ring (41) into o-ring groove in valve body (29).

K-3.3) Screw valve body (29) into central body (10).

CAUTION$_9$: Do not rip or tear o-ring during installation.

K) ASSEMBLY (cont'd)

K-3.4) Assemble rubber mandrel assembly and install:

K-3.4.1) Install rubber retainer (15), rubber spacers (12), and elements (13, 14) onto rubber mandrel (11).

K-3.4.2) Install rubber mandrel assembly onto inner mandrel (2).

K-3.4.3) Screw rubber mandrel (11) into valve body (29).

CAUTION$_9$: Do not rip or tear o-ring during installation.

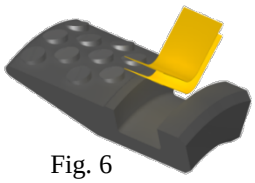

Fig. 6

K-3.5) Screw lower cone (16) into rubber retainer (15).

K-3.6) Assemble drag block body assembly and install:

K-3.6.1) Install lower slips (17) and lower slip springs (25) into drag block body (18). Wedge slips outward.

NOTE$_{11}$: Install two (2ea) slip springs per slip (Fig. 6).

K-3.6.2) Install lower slip support (32) into drag block body (18).

K-3.6.3) Align hole in lower slip support (32) with threaded hole in drag block body (18). Screw socket cap screw (34) into drag block body (18). Remove wedges.

K-3.6.4) Install drag block body (18) and assembly onto rubber mandrel (11).

K-3.7) Screw rubber mandrel cap (19) onto rubber mandrel (11).

K-3.8) Install drag blocks (22) and drag block springs (3) into drag block body (18). Compress drag blocks (22) with drag block assembly tool (T1).

NOTE$_{12}$: Install five (5ea) drag block springs per drag block (Fig. 7).

Fig. 7

K-3.9) Install drag block retainer (21) onto drag block body (18) capturing ends of drag blocks (22).

K-3.10) Screw J-body (20) onto drag block body (18) (**NOTE$_4$**: Left-hand threads).

K-3.11) Screw set screws (35) into J-body (20). Release drag blocks (22).

K-3.12) Install o-ring (39) into o-ring groove in J-pin bottom sub (23).

K-3.13) Screw J-pin bottom sub (23) onto inner mandrel (2).

NOTE$_3$: Drag block body assembly must be free to rotate.

CAUTION$_9$: Do not rip or tear o-ring during installation.

K-3.14) Screw set screws (37) into J-pin bottom sub (23). Move J-body (20) as needed to access threaded holes in J-pin bottom sub (23).

K-4) Unclamp top sub (1) from vise and remove assembled tool.

L) PARTS LIST

ITEM	QTY	DESCRIPTION	MATERIAL	(32.0 – 35.0#) P/N 61366RS
1	1	TOP SUB	P-110	61355615
2	1	MANDREL	P-110	61355215
3	30	DRAG BLOCK SPRING	-	9100900
4	1	HOLD DOWN CAP	P-110	61366370
5	1	SEAL RECEPTACLE	P-110	61355730
6	1	HOLD DOWN BODY	P-110	61366321
7	1	HOLD DOWN EXTENSION	P-110	61355310
8	1	COMPENSATING MANDREL	P-110	61355240
9	1	COMPENSATING PISTON	P-110	61355710
10	1	CENTRAL BODY	P-110	61355381
11	1	RUBBER MANDREL	P-110	61355220
12	2	ELEMENT SPACER	1026	61366840
13	1	ELEMENT	80 DURO NITRILE	61366512
14	2	ELEMENT	90 DURO NITRILE	61366513
15	1	RUBBER RETAINER	P-110	61366850
16	1	LOWER CONE	P-110	61366420
17	4	LOWER SLIP W/ CARBIDE	P-110	60066135C
18	1	DRAG BLOCK BODY	P-110	61366335
19	1	RUBBER MANDREL CAP	DLMS60	60055230
20	1	J-BODY	P-110	61355340
21	1	DRAG BLOCK RETAINER	1026	61366910
22	6	DRAG BLOCK W/ CARBIDE	4140	9055900C
23	1	BOTTOM SUB	P-110	61355635
24	1	QUAD SEAL	90 DURO NITRILE	61355520
25	8	LOWER SLIP SPRING	-	7155901
26	12	HOLD DOWN BUTTON SPRING	-	61355975
27	1	SEAL RETAINER	L-80	61355530
28	1	STRAP RETAINER	1026	61366650
29	1	VALVE BODY	P-110	61366350
30	6	HYDRAULIC HOLD DOWN BUTTON W/ CARBIDE	STRESSPROOF	61357140C

L) PARTS LIST (cont'd)

ITEM	QTY	DESCRIPTION	MATERIAL	(32.0 – 35.0#) P/N 61366RS
31	3	HOLD DOWN STRAP	P-110	61355360
32	1	LOWER SLIP SUPPORT	P-110	61366912
33	3	FLAT HEAD SOCKET CAP SCREW 5/16-18 UNC X 1/2	STEEL	FHSC031C050
34	1	SOCKET CAP SCREW 5/16-18 UNC X 1/2	STEEL	SCS031C050
35	4	SET SCREW 5/16-18 UNC X 1/2	STEEL	SSS031C050
36	3	SET SCREW 3/8-16 UNC X 3/8	STEEL	SSS037C037
37	4	SET SCREW 3/8-16 UNC X 1/2	STEEL	SSS037C050
38	6	224 O-RING	90 DURO NITRILE	90224
39	1	229 O-RING	90 DURO NITRILE	90229
40	1	231 O-RING	90 DURO NITRILE	90231
41	2	235 O-RING	90 DURO NITRILE	90235
42	2	236 O-RING	90 DURO NITRILE	90236
43	1	241 O-RING	90 DURO NITRILE	90241
44	1	334 O-RING	90 DURO NITRILE	90334
45	1	339 O-RING	90 DURO NITRILE	90339
46	1	342 O-RING	90 DURO NITRILE	90342

REDRESS KIT (RDK)		61366050
ASSEMBLED WEIGHT		205 LBS

L) PARTS LIST (cont'd)

L-1) ELASTOMER TRIM OPTIONS

NOTE$_{13}$: For temperature range, refer to Elastomer Trim Temperature Guide.

L-1.1) HSN

ITEM	QTY	DESCRIPTION	MATERIAL	(32.0 – 35.0#) P/N 61366RSH
13	1	ELEMENT	80 DURO HSN	61366512H
14	2	ELEMENT	90 DURO HSN	61366513H
24	1	QUAD SEAL	90 DURO HSN	61355520H
38	6	224 O-RING	90 DURO HSN	90224H
39	1	229 O-RING	90 DURO HSN	90229H
40	1	231 O-RING	90 DURO HSN	90231H
41	2	235 O-RING	90 DURO HSN	90235H
42	2	236 O-RING	90 DURO HSN	90236H
43	1	241 O-RING	90 DURO HSN	90241H
44	1	334 O-RING	90 DURO HSN	90334H
45	1	339 O-RING	90 DURO HSN	90339H
46	1	342 O-RING	90 DURO HSN	90342H

REDRESS KIT (RDK)		61366050H

L-1.2) VITON

ITEM	QTY	DESCRIPTION	MATERIAL	(32.0 – 35.0#) P/N 61366RSV
13	1	ELEMENT	80 DURO VITON	61366512V
14	2	ELEMENT	90 DURO VITON	61366513V
24	1	QUAD SEAL	90 DURO VITON	61355520V
38	6	224 O-RING	90 DURO VITON	90224V
39	1	229 O-RING	90 DURO VITON	90229V
40	1	231 O-RING	90 DURO VITON	90231V
41	2	235 O-RING	90 DURO VITON	90235V
42	2	236 O-RING	90 DURO VITON	90236V
43	1	241 O-RING	90 DURO VITON	90241V
44	1	334 O-RING	90 DURO VITON	90334V
45	1	339 O-RING	90 DURO VITON	90339V
46	1	342 O-RING	90 DURO VITON	90342V

REDRESS KIT (RDK)		61366050V

M) TECHNICAL ILLUSTRATION

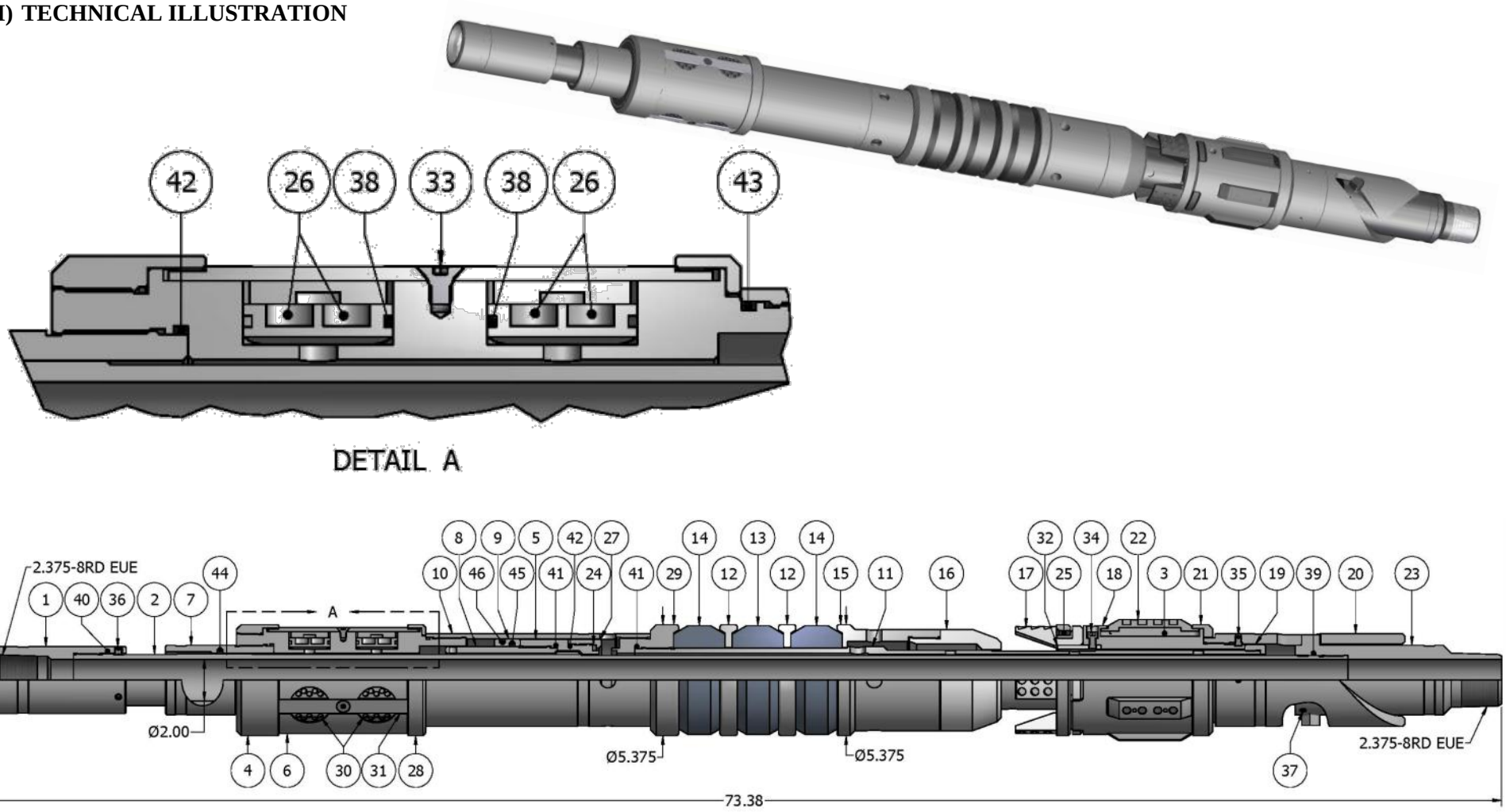

N) REVISION HISTORY

DATE	REVISION	DESCRIPTION OF CHANGES	REVISED BY	APPROVED BY
12/10/2015	C	Added: P/N 61366RSH, P/N 61366RSV, 36.7-40.2# & reference, Elastomer Trim Options, Note2, Tensile Load, Hanging Weight, Torque Thru Tool, *Casing must be cemented for this load rating., PRE-INSTALLATION INSPECTION PROCEDURES, Fig. 1, Caution4, STORAGE RECOMMENDATIONS, HAND TOOLS, SPECIAL TOOLS – T3, Caution7, Note8, Fig. 2, Fig.3, Fig.4, Fig.5, Fig.6, Fig.7, Parts List - Elastomer Trim Options; Revised: Logo, Title, Specification Guide – Headers Updated, Note1, PRESSURE AFFECTED AREA GUIDE, ELASTOMER TRIM TEMPERATURE GUIDE was ELEMENT SELECTION GUIDE, Elastomer Durometer Temperatures – Nitrile (90/80/90 Duro) was 250° - 300°F, Nitrile (Contact D&L Sales) was 300°F +, Rubber Type Temperature Ranges – Nitrile was 70° - 300°F, HSN was 70° - 325°F, Note7, Material Updates - DLMS60 was 1026 (P/N 60055230), XXX O-Ring was XXX-90 O-RING, 90 DURO NITRILE was NITRILE;	B.Mathis	K.Riggs