	D-H TENSION PACKER 4-1/2" X 2-3/8" (9.5 – 13.5#)	Manual No: **DL-405-4500-1493** Revision: **A** Revision Date: **10/06/2021**
Authored by: J.Anderson		*Approved by: E.Visaez*

A) DESCRIPTION

The D-H Tension Packer is for use in water flood, injection or producing wells. This tension packer has a built-in safety system to eliminate problems should conventional retrieval methods fail. Right-hand rotation releases the first safety joint allowing the slips to pull off the cone and release the packer. Should the packer fail to release, a second safety joint can be broken to release the packer. This safety feature allows for circulation down the tubing to remove debris.

In addition, the D-H Tension Packer is available for open-hole applications and incorporates dual elongated packing elements and deep wickered slips for better bite into the formation.

B) SPECIFICATION GUIDE

CASING			TOOL		THREAD CONNECTION BOX UP / PIN DOWN	PART NUMBER
SIZE (INCHES)	**WEIGHT** (LBS/FT)	**RECOMMENDED HOLE SIZE** (INCHES)	**GAGE OD** (INCHES)	**NOMINAL ID** (INCHES)		
4-1/2	9.5 – 13.5	3.920 – 4.090	3.750	1.94	2-3/8 EUE	40545 40545H[1] 40545V[2] 40545C[3] 40545HC[4] 40545VC[5]

Tool Options: [1]HSN, [2]Viton, [3]Nitrile, Carbide, [4]HSN, Carbide, [5]Viton, Carbide

NOTE$_1$: Tools listed are right-hand set.

DIFFERENTIAL PRESSURE (MAX)	TENSILE LOAD THRU TOOL (MAX)
5,000 PSI	40,000 LBS

C) PRE-INSTALLATION INSPECTION PROCEDURES

CAUTION$_1$: D&L ships tool connections made-up **HAND TIGHT**—labeled with hand-tight tape on the tool (Fig. 1) —unless stated otherwise. Tighten/torque all connections properly before operating tool.

Fig. 1

GENERAL THREAD CONNECTION TORQUE RECOMMENDATIONS			
STUB ACME / ACME THREADS	**INTERNAL TAPERED TUBING THREADS**		**PREMIUM THREADS**
	UP TO 2-3/8"	**GREATER THAN 2-3/8"**	
600 – 800 FT-LBS	600 – 800 FT-LBS	800 – 1,200 FT-LBS	Consult thread manufacturer's recommendations.

GENERAL SCREW TORQUE RECOMMENDATIONS									
SCREW SIZE (INCHES)	#6	#8	#10	1/4	5/16	3/8	7/16	1/2	5/8 and larger
TORQUE RANGE (INCH-POUNDS)	5 – 8	10 – 15	18 – 25	25 – 40	50 – 80	90 – 135	160 – 210	250 – 330	450 - 650

D & L OIL TOOLS
P.O. BOX 52220 TULSA, OK 74152
PHONE: (800) 441-3504 www.dloiltools.com

C) PRE-INSTALLATION INSPECTION PROCEDURES (cont'd)

Before first use, D&L recommends disassembly and inspection of the tools unless stated otherwise. Ensure parts have not been damaged during shipping. Replace damaged parts with D&L replacement parts. Contact D&L sales for replacement part information.

Before re-using the tool, D&L recommends disassembly and inspection of the tool. Clean parts and ensure parts are in good working condition. Replace worn or damaged parts with D&L replacement parts.

When redressing the tool, D&L recommends replacement of all seals, elements, o-rings, shear screws, etc. Contact D&L sales for redress kit and/or other part information.

D) SETTING PROCEDURES

CAUTION$_2$: Do not run the tool without properly tightening connections. Running the tool with loose connections may damage the tool and cause malfunction.

Run to setting depth. Set down the work string and rotate 1/4 turn to the right at the packer. Pull tension on the packer to set the slips and compress the packing elements. A minimum pull of 10,000 lbs. at the packer is required to pack off the elements.

E) RELEASING PROCEDURES

Set down on the work string to unset the slips, relax the packing elements and re-jay the packer. The tool may now be moved and reset, or pulled from the well.

If this does not un-set the packer, torque the work string to the right 10-12 rotations to unscrew the upper mandrel from the R&L coupling (i.e., release the first safety joint). Pick up on the work string to release the slips and retrieve the tool. If still unable to release tool, then continue torquing to the right while picking up on the work string to unscrew the clutch nut from the upper mandrel (i.e., release the second safety joint). Retrieve work string with the upper mandrel. The remaining assembly can then be fished.

F) STORAGE RECOMMENDATIONS

When preparing the tool for storage, follow the Pre-Installation Inspection Procedures. Re-assemble the tool with connections hand-tight only and in running position if applicable. Elements should be in a relaxed state—free from tension, compression, and other stresses that could cause deformation.

Store the tool, if possible, in an enclosed, temperature and humidity controlled environment. Avoid excessively high temperatures over long periods of time. Shield elastomeric parts from ultraviolet light sources. Keep tool dry and protected from condensation. Do not store in contact with or near volatile or corrosive chemicals. Do not store near ozone generating equipment or operations such as welding.

G) ELASTOMER TRIM TEMPERATURE GUIDE

RUBBER TYPE	TEMPERATURE RANGE
NITRILE	40° - 250°F
HSN (HNBR)	70° - 300°F
VITON	100° - 350°F

H) RECOMMENDED HAND TOOLS

- VISE
- GLOVES
- ALLEN WRENCHES
- TAPE MEASURE
- O-RING PICK
- BAR
  - 1/2-INCH
  - 3/4-INCH
- PAINT BRUSH, 2-INCH
- PIPE WRENCH, 3-FT (2 EA)
- "CHEATER" PIPE, 4-FT LONG
- ADJUSTABLE WRENCH, 12-INCH
- CORDLESS DRILL, 18V
- SNAP RING SPREADER PLIERS
- ALIGNING PUNCH
- SCREWDRIVER SET, FLAT-TIPPED
- SOCKET SETS
  - 3/8-INCH DRIVE
  - 1/2-INCH DRIVE
- HAMMERS
  - SLEDGE
  - BALL PEEN
  - DEAD BLOW

I) DISASSEMBLY

I-1) Clamp coupling (1) in vise.

I-1.1) Unscrew and remove bottom sub (11) from lower mandrel (8).

I-1.2) Remove element (10) and cone (9) from lower mandrel (8).

I-1.3) Unscrew and remove button head cap screws (14) from J-body (7) and remove drag springs (12).

I-1.4) Unscrew and remove button head cap screws (15) from clutch ring (5).

I-1.5) Wedge slips (7) outward (if needed). Remove J-body assembly from R&L coupling (4) and lower mandrel (8) and disassemble:

I-1.5.1) Remove wedges (if needed). Remove slips (7) and slip springs (13) from J-body (6).

I-1.6) Unscrew and remove lower mandrel (8) from R&L coupling (4).

I-1.7) Unscrew and remove R&L coupling (4) from upper mandrel (2) (**NOTE$_2$**: Left-hand threads).

I-1.7.1) Remove o-rings (16) from R&L coupling (4).

I-1.8) Unscrew and remove clutch nut (3) from upper mandrel (2) (**NOTE$_2$**: Left-hand threads).

I-1.9) Remove clutch ring (5) from upper mandrel (2).

I-1.10) Unscrew and remove upper mandrel (2) from coupling (1).

I-2) Unclamp and remove coupling (1) from vise.

J) ASSEMBLY

NOTE$_3$: Clean and inspect all parts. Replace all worn and damaged parts. Install parts in proper order, and orientation and tighten/torque all connections properly.

CAUTION$_3$: To ensure tool operates properly, install o-rings in o-ring grooves **NOT** thread reliefs (Fig. 2).

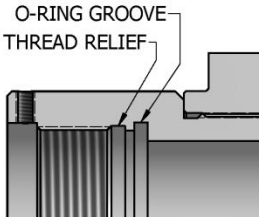

Fig. 2

J-1) Clamp coupling (1) in vise.

J-1.1) Screw upper mandrel (2) into coupling (1).

J-1.2) Install clutch ring (5) onto upper mandrel (2).

J-1.3) Screw clutch nut (3) onto upper mandrel (2) (**NOTE$_2$**: Left-hand threads).

J-1.4) Install o-rings (16) in o-ring grooves in R&L coupling (4).

J-1.5) Screw R&L coupling (4) onto upper mandrel (2) (**NOTE$_2$**: Left-hand threads).

CAUTION$_4$: Do not rip or tear o-ring during installation.

J-1.6) Screw lower mandrel (8) into R&L coupling (4).

CAUTION$_4$: Do not rip or tear o-ring during installation.

J) ASSEMBLY (cont'd)

J-1.7) Assemble J-body assembly and install:

J-1.7.1) Install slips (7) and slip springs (13) into J-body (6). Wedge slips outwards.

J-1.7.2) Install J-body (6) onto lower mandrel (8) and onto R&L coupling (4). Position J-pin of R&L coupling in running position of slot in J-body. Remove wedges.

J-1.8) Install clutch ring (5) into J-body (6). Align threaded holes in clutch ring (5) with holes in J-body (6).

J-1.9) Screw button head cap screws (15) into clutch ring (5).

J-1.10) Set drag springs (12) in place on J-body (6) with lower end of springs captured by lower lip of J-body (6). Align holes in springs with threaded holes in J-body (6).

J-1.11) Screw button head cap screws (14) into J-body (6).

J-1.12) Install cone (9) and element (10) onto lower mandrel (8).

J-1.13) Screw bottom sub (11) onto lower mandrel (8).

J-2) Unclamp coupling (1) from vise and remove assembled tool.

K) PARTS LIST

ITEM	QTY	DESCRIPTION	MATERIAL	P/N 40545
1	1	COUPLING	DLMS60	CP-BAB-BBB-A
2	1	UPPER MANDREL	1026 CD	40545220
3	1	CLUTCH NUT	1026	40545810
4	1	R & L COUPLING	1026	40545640
5	1	CLUTCH RING	DLMS60	40545820
6	1	J-BODY ASSY.	1026	40545310
7	4	SLIP	1026	71045110
8	1	LOWER MANDREL	1026 CD	40545211
9	1	CONE	DLMS60	40045410
10	1	ELEMENT	80 DURO NITRILE	40545512
11	1	BOTTOM SUB	1026	40545610
12	8	DRAG SPRING	DLMSSP301	40570920
13	4	SLIP SPRING	-	7145000
14	8	5/16-18 UNC X 5/16 BUTTON HEAD SOCKET CAP SCREW	STEEL	BHSC031C031
15	6	5/16-18 UNC X 7/16 BUTTON HEAD SOCKET CAP SCREW	STEEL	BHSC031C043
16	2	227 O-RING	90 DURO NITRILE	90227

REDRESS KIT (RDK)		40545050
ASSEMBLED WEIGHT		40 LBS

K) PARTS LIST (cont'd)

K-1) ELASTOMER TRIM OPTIONS

NOTE5: For temperature range, refer to Elastomer Trim Temperature Guide.

K-1.1) HSN

ITEM	QTY	DESCRIPTION	MATERIAL	P/N 40545H
10	1	ELEMENT	80 DURO HSN	40545512H
16	2	227 O-RING	90 DURO HSN	90227H

REDRESS KIT (RDK)		40545050H

K-1.2) VITON

ITEM	QTY	DESCRIPTION	MATERIAL	P/N 40545V
10	1	ELEMENT	80 DURO VITON	40545512V
16	2	227 O-RING	90 DURO VITON	90227V

REDRESS KIT (RDK)		40545050V

K-2) CARBIDE OPTION

ITEM	QTY	DESCRIPTION	MATERIAL	P/N 40545C
7	4	CARBIDE SLIP	DLMS110	71045110C

L) TECHNICAL ILLUSTRATION

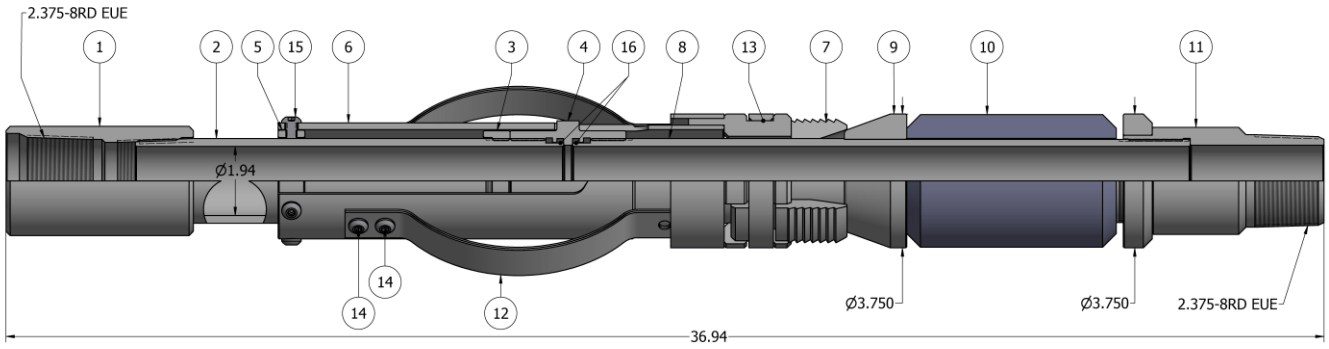

M) REVISION HISTORY

DATE	REVISION	DESCRIPTION OF CHANGES	REVISED BY	APPROVED BY
10/06/2021	A	Created manual	-	-