A) DESCRIPTION

The YYT Packer is an economical, compact tools for injection, pumping, medium range treating and production applications. The yo-yo design allows the packer to be set and unset without rotation of the tubing.

The packer features an adjustable straight pull safety shear release. This packer is not designed to be run in compression.

B) SPECIFICATION GUIDE

CASING			TOOL		THREAD CONNECTION BOX UP / PIN DOWN	PART NUMBER
SIZE (INCHES)	**WEIGHT** (LBS/FT)	**RECOMMENDED HOLE SIZE** (INCHES)	**GAGE OD** (INCHES)	**NOMINAL ID** (INCHES)		
5-1/2	14.0 – 20.0	4.778 – 5.012	4.625	1.94	2-3/8 EUE	40955C-3 40955HC-3[1] 40955VC-3[2]

Elastomer Trim Options: [1]HSN, [2]Viton

DIFFERENTIAL PRESSURE (MAX)	TENSILE LOAD THRU TOOL (MAX)
7,000 PSI	61,000 LBS

C) PRE-INSTALLATION INSPECTION PROCEDURES

CAUTION1: D&L ships tool connections made-up **HAND TIGHT**—labeled with hand-tight tape on the tool (Fig. 1) — unless stated otherwise. Tighten/torque all connections properly before operating tool.

Fig. 1

GENERAL THREAD CONNECTION TORQUE RECOMMENDATIONS			
STUB ACME / ACME THREADS	**INTERNAL TAPERED TUBING THREADS**		**PREMIUM THREADS**
	UP TO 2-3/8”	**GREATER THAN 2-3/8”**	
600 – 800 FT-LBS	600 – 800 FT-LBS	800 – 1,200 FT-LBS	Consult thread manufacturer’s recommendations.

GENERAL SCREW TORQUE RECOMMENDATIONS									
SCREW SIZE (INCHES)	#6	#8	#10	1/4	5/16	3/8	7/16	1/2	5/8 and larger
TORQUE RANGE (INCH-POUNDS)	5 – 8	10 – 15	18 – 25	25 – 40	50 – 80	90 – 135	160 – 210	250 – 330	450 - 650

Before first use, D&L recommends disassembly and inspection of the tool unless stated otherwise. Ensure parts have not been damaged during shipping. Replace damaged parts with D&L replacement parts. Contact D&L sales for replacement part information.

C) PRE-INSTALLATION INSPECTION PROCEDURES (cont'd)

Re-assemble the tool after inspection. Install parts in the correct order and orientation. Properly tighten connections.

Before re-using the tool, D&L recommends disassembly and inspection of the tool. Clean parts and ensure parts are in good working condition. Replace worn or damaged parts with D&L replacement parts.

When redressing the tool, D&L recommends replacement of all seals, elements, o-rings, shear screws, etc. Contact D&L sales for redress kit and/or other part information.

D) SETTING PROCEDURES

CAUTION$_2$: Do not run the tool without properly tightening connections. Running the tool with loose connections may damage the tool and cause malfunction.

Run to setting depth. Pick up on the tubing then slack off on the tubing to allow for setting stroke (5 – 6 inches) plus desired tubing load . Pull tension to set the slips and pack off the elements (min. 12,000 lbs) (Fig. 2). After setting the packer, the tubing string must be keep neutral or in tension.

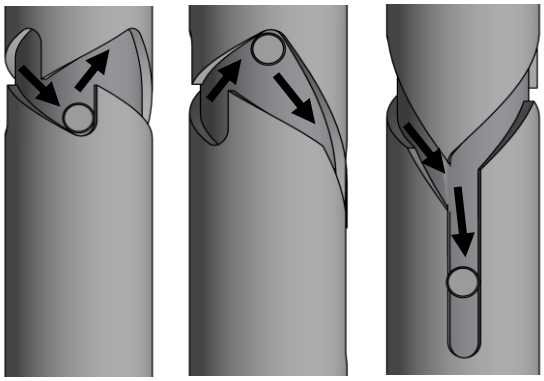

Fig. 2

E) RELEASING PROCEDURES

Set down on the tubing to unset the slips, relax the packing elements and re-jay the packer. The tool may now be moved and reset or pulled from the well.

E-1) EMERGENCY RELEASE

If the packer will not release conventionally, pick up with enough force to shear the safety shear release (adjustable up to 45,000 lbs). Once it shears, the tool must be tripped out. If the safety shear release will not shear, torque the tubning to the right until the secondary release threads break loose. Rotate 12 – 15 additional turns to the right at the tool and trip out.

F) STORAGE RECOMMENDATIONS

When preparing the tool for storage, follow the Pre-Installation Inspection Procedures. Re-assemble the tool with connections hand-tight only and in running position if applicable. Elements should be in a relaxed state—free from tension, compression, and other stresses that could cause deformation.

Store the tool, if possible, in an enclosed, temperature and humidity controlled environment. Avoid excessively high temperatures over long periods of time. Shield elastomeric parts from ultraviolet light sources. Keep tool dry and protected from condensation. Do not store in contact with or near volatile or corrosive chemicals. Do not store near ozone generating equipment or operations such as welding.

G) ELASTOMER TRIM TEMPERATURE GUIDE

NITRILE (STD)			
TEMPERATURE RANGE (F°)	**DUROMETER**		
	END	**MIDDLE**	**END**
40° - 125°	80	70	80
125° - 250°	90	70	90
150° - 250°	90	80	90
250° +	Contact D&L Sales		

RUBBER TYPE	**TEMPERATURE RANGE**
NITRILE	40° - 250°F
HSN (HNBR)	70° - 300°F
VITON	100° - 350°F

H) RECOMMENDED TOOLS

H-1) HAND TOOLS

- VISE
- GLOVES
- ALLEN WRENCHES
- TAPE MEASURE
- O-RING PICK
- BAR
  - 1/2-INCH
  - 3/4-INCH
- PAINT BRUSH, 2-INCH
- PIPE WRENCH, 3-FT (2 EA)
- “CHEATER” PIPE, 4-FT LONG
- ADJUSTABLE WRENCH, 12-INCH
- CORDLESS DRILL, 18V
- SNAP RING SPREADER PLIERS
- ALIGNING PUNCH
- SCREWDRIVER SET, FLAT-TIPPED
- SOCKET SETS
  - 3/8-INCH DRIVE
  - 1/2-INCH DRIVE
- HAMMERS
  - SLEDGE
  - BALL PEEN
  - DEAD BLOW

H-2) SPECIAL TOOLS

ITEM	QTY	DESCRIPTION	PART NUMBER
T1	1	DRAG BLOCK ASSEMBLY TOOL	AT045110

I) DISASSEMBLY

I-1) Clamp coupling (1) in vise.

I-1.1) Unscrew and remove shear screws (19) from shear sleeve (3).

I-1.2) Unscrew and remove bottom sub (4) from inner mandrel (2).

I-1.2.1) Remove o-ring (18) from bottom sub (4).

I-1.3) Remove shear sleeve (3), elements (13, 14), rubber spacers (12) and lower cone (16) from inner mandrel (2).

I-2) Unclamp and remove coupling (1) from vise. Clamp lower end of inner mandrel (2) in vise.

I-2.1) Moving to upper end of tool, unscrew and remove coupling (1) from inner mandrel (2) (**NOTE$_1$**: Left-hand threads).

I-2.2) Unscrew and remove set screws (9) from J-pin retainer (6).

I-2.3) Compress drag blocks (7) with drag block body assembly tool (T1).

I-2.4) Unscrew J-pin retainer (6) from drag block body (5) (**NOTE$_1$**: Left-hand threads) and remove from inner mandrel (2).

I-2.5) Remove J-pin (17) from J-pin swivel (15).

I-2.6) Remove J-pin swivel (15) from inner mandrel (2).

I-2.7) Release and remove drag blocks (7) and drag block springs (10) from drag block body (5).

I-2.8) Wedge lower slips (8) outwards (if needed). Remove drag block body assembly and disassemble:

I-2.8.1) Remove wedges (if needed). Remove lower slips (8) and slip springs (11) from drag block body (5).

I-3) Unclamp and remove inner mandrel (2) from vise.

J) ASSEMBLY

NOTE$_2$: Clean and inspect all parts. Replace all worn and damaged parts. Install parts in proper order, and orientation and tighten/torque all connections properly.

CAUTION$_4$: To ensure tool operates properly, install o-rings in o-ring grooves **NOT** thread relief (Fig. 3).

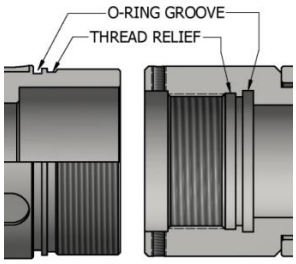

Fig. 3

J-1) Clamp lower end of inner mandrel (2) in vise.

J-1.1) Assemble drag block body assembly and install:

J-1.1.1) Install lower slips (8) and slip springs (11) into drag block body (5). Wedge lower slips (8) outwards.

NOTE$_3$: Install one (1ea) spring per slip (Fig. 4).

J-1.1.2) Install drag block body assembly onto inner mandrel (2). Position drag block body (5) below run-in position of J-slot on mandrel (2). Remove wedges.

J-1.2) Install drag blocks (7) and drag block springs (10) into drag block body (5).

NOTE$_4$: Install four (4 ea) springs per drag block (Fig. 5).

J-1.3) Compress drag blocks (7) with drag block assembly tool (T1).

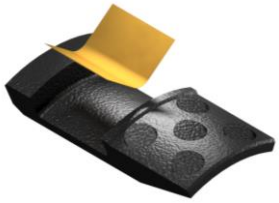
Fig. 4

Fig. 6

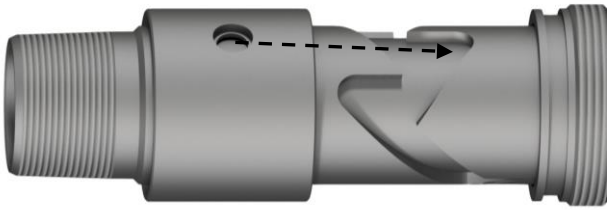

J-1.4) Install J-pin swivel (15) onto inner mandrel (2). Position swivel with J-pin hole aligned with run-in position in J-slot (Technical Illustration, Fig. 6).

J-1.5) Install J-pin (17) into J-pin swivel (15).

J-1.6) Install J-pin retainer (6) onto inner mandrel (2) and screw onto drag block body (5) to retain J-pin (17) and capture ends of drag blocks (7) (**NOTE$_1$**: Left-hand threads).

J-1.7) Screw set screws (9) into J-pin retainer (6). Release drag blocks (7).

J-1.8) Screw coupling (1) onto inner mandrel (2) (**NOTE$_1$**: Left-hand threads).

J-1.9) Unclamp and remove inner mandrel (2) from vise. Clamp coupling (1) in vise.

J-1.10) From lower end of tool, install lower cone (16), elements (13, 14), rubber spacers (12) and shear sleeve (3) onto inner mandrel (2).

J-1.11) Install o-ring (18) in groove in bottom sub (4).

J-1.12) Screw bottom sub (4) onto inner mandrel (2).

CAUTION$_5$: Do not rip or tear o-ring during installation.

Fig. 5

J-1.13) Align threaded holes in shear sleeve (3) with shear screw groove in bottom sub (4). Screw desired quantity of shear screws (19) into shear sleeve (3). Tighten until shear screws (19) contact bottom sub (4). Back off 1/4 turn.

J-2) Unclamp coupling (1) from vise and remove assembled tool.

K) PARTS LIST

ITEM	QTY	DESCRIPTION	MATERIAL	P/N 40955C-3
1	1	COUPLING	DLMS60	CP2375NLH2375E
2	1	INNER MANDREL	DLMS80	40955213
3	1	SHEAR SLEEVE	DLMS60	40955853
4	1	BOTTOM SUB	DLMS80	40945630
5	1	DRAG BLOCK BODY	DLMS35	60055335
6	1	J-PIN RETAINER	DLMS35	40955370
7	4	DRAG BLOCK W/ CARBIDE	DLMSDB4	9055900C
8	4	LOWER SLIP W/ CARBIDE	DLMS110	60055135C
9	4	SOCKET SET SCREW 5/16-18 UNC X 1/2	STEEL	SSS031C050
10	16	DRAG BLOCK SPRING	-	9100900
11	8	SLIP SPRING	-	7155901
12	2	RUBBER SPACER	DLMS35	72055851
13	1	ELEMENT	70 DURO NITRILE	72055511
14	2	ELEMENT	90 DURO NITRILE	72055513
15	1	J-PIN SWIVEL	DLMS35	40955800
16	1	LOWER CONE	DLMS110	72055420
17	1	J-PIN	DLMS110	40945635Y
18	1	228 O-RING	90 DURO NITRILE	90228
19	10	SLOTTED SHEAR SCREW (4500#) 7/16-14 UNC X 1/2	DLM360BRS	BSSSLT043C050

REDRESS KIT (RDK)		40955050-3
ASSEMBLED WEIGHT		97 LBS

K) PARTS LIST (cont’d)

K-1) ELASTOMER TRIM OPTIONS

NOTE5: For temperature range, refer to Elastomer Trim Temperature Guide.

K-1.1) HSN

ITEM	QTY	DESCRIPTION	MATERIAL	P/N 40955HC-3
13	1	ELEMENT	70 DURO HSN	72055511H
14	2	ELEMENT	90 DURO HSN	72055513H
18	1	228 O-RING	90 DURO HSN	90228H

REDRESS KIT (RDK)		40955050H-3

K-1.2) VITON

ITEM	QTY	DESCRIPTION	MATERIAL	P/N 40955VC-3
13	2	ELEMENT	70 DURO VITON	72055511V
14	1	ELEMENT	90 DURO VITON	72055513V
18	1	228 O-RING	90 DURO VITON	90228V

REDRESS KIT (RDK)		40955050V-3

L) TECHNICAL ILLUSTRATION

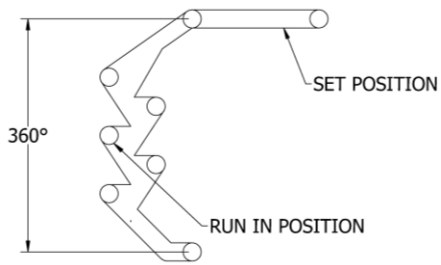

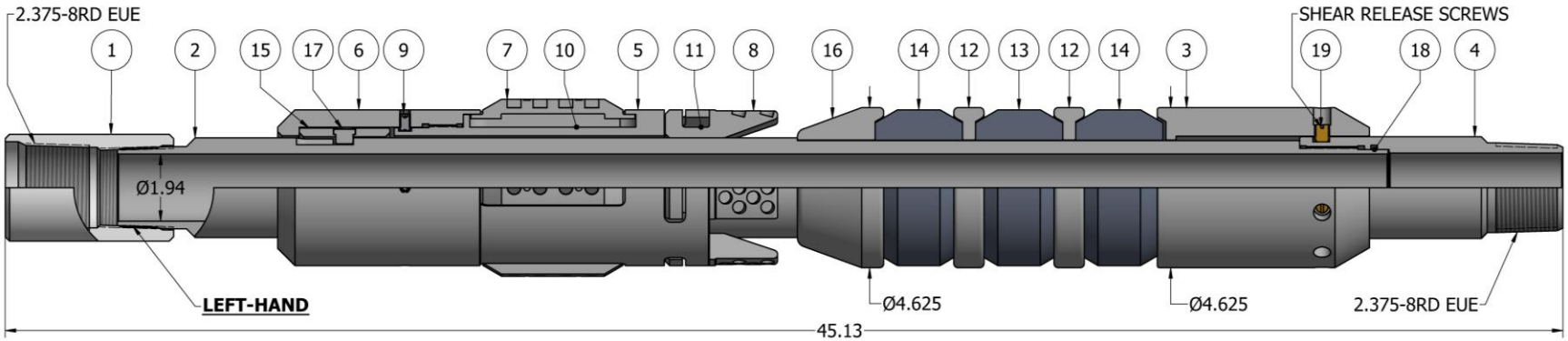

M) REVISION HISTORY

DATE	REVISION	DESCRIPTION OF CHANGES	REVISED BY	APPROVED BY
05/13/2021	C	Revised Setting Procedures	J.Anderson	E.Visaez
05/28/2020	B	Revised setting stroke	J.Anderson	Z.Speer
01/30/2019	A	Created new manual	-	-