A) DESCRIPTION

The ASW Retrievable Bridge Plug is a high pressure plug for multiple zone and selective single-zone operations such as acidizing, fracturing, cementing, and testing. It features a large internal by-pass to reduce swabbing when running and retrieving. The by-pass closes during the setting of the plug and opens prior to releasing the upper slips to equalize pressure when unsetting. The by-pass is located directly below the upper slips to help wash debris when the by-pass is open.

This tool is a version of the AS Retrievable Bridge Plug that allows the plug to be set on wireline or with a hydraulic setting tool and retrieved with tubing. It cannot be reset in the wellbore once it is unset, but it can be pulled, re-dressed and run again. A Wireline Adapter Kit is required for this version.

CAUTION$_1$: When running this tool with a packer, make sure the J-slots in the plug, running/ retrieving tool, and packer are all compatible.

NOTE$_1$: This packer requires at least a 30 second burn on the wireline setting tool to ensure a proper set. A burn time less than 30 seconds may shear the setting tool from the packer before fully setting the packer.

B) RELATED TOOLS (sold separately)

B-1) 11-3/4" X 4-1/2" Spring Loaded Retrieving Tool (P/N 57711) – refer to Technical Manual *DL-577-11750-580*.

B-2) 8-5/8" to 14" Wireline Adapter Kit (WLAK) (P/N 72385) – refer to Technical Manual *DL-723-8625-577*.

C) SPECIFICATION GUIDE

CASING			GAGE OD (INCHES)	THREAD CONNECTION PIN DOWN	PART NUMBER
SIZE (INCHES)	WEIGHT (LBS/FT)	RECOMMENDED HOLE SIZE (INCHES)			
11-3/4	42.0 – 71.0	10.586 – 11.084	10.375	3-1/2 EUE	72411RR 72411RRH[1] 72411RRV[2]

Elastomer Trim Options: [1]HSN, [2]Viton

NOTE$_2$: Tool listed is right-hand set / right-hand release. Additional J-slot designs are available.

DIFFERENTIAL PRESSURE (MAX)	HANGING WEIGHT (MAX)	TENSILE LOAD THRU TOOL (MAX)	TORQUE THRU TOOL (MAX)
6,000 PSI	106,200 LBS[†]	106,200 LBS	2,000 FT-LBS

[†]Casing must be cemented for this load rating.

D & L OIL TOOLS
P.O. BOX 52220 TULSA, OK 74152
PHONE: (800) 441-3504 www.dloiltools.com

D) PRE-INSTALLATION INSPECTION PROCEDURES

CAUTION$_2$: D&L ships tool connections made-up HAND TIGHT—labeled with hand-tight tape on the tool (Fig. 1) — unless stated otherwise. Tighten/torque all connections properly before operating tool.

Fig. 1

GENERAL THREAD CONNECTION TORQUE RECOMMENDATIONS			
STUB ACME / ACME THREADS	**INTERNAL TAPERED TUBING THREADS**		**PREMIUM THREADS**
	UP TO 2-3/8"	**GREATER THAN 2-3/8"**	
600 – 800 FT-LBS	600 – 800 FT-LBS	800 – 1,200 FT-LBS	Consult thread manufacturer's recommendations.

GENERAL SCREW TORQUE RECOMMENDATIONS									
SCREW SIZE (INCHES)	#6	#8	#10	1/4	5/16	3/8	7/16	1/2	5/8 and larger
TORQUE RANGE (INCH-POUNDS)	5 – 8	10 – 15	18 – 25	25 – 40	50 – 80	90 – 135	160 – 210	250 – 330	450 - 650

Before first use, D&L recommends disassembly and inspection of the tool unless stated otherwise. Ensure parts have not been damaged during shipping. Replace damaged parts with D&L replacement parts. Contact D&L sales for replacement part information.

Re-assemble the tool after inspection. Install parts in the correct order and orientation. Properly tighten connections.

Before re-using the tool, D&L recommends disassembly and inspection of the tool. Clean parts and ensure parts are in good working condition. Replace worn or damaged parts with D&L replacement parts.

When redressing the tool, D&L recommends replacement of all seals, elements, o-rings, shear screws, etc. Contact D&L sales for redress kit and/or other replacement part information.

E) SETTING PROCEDURES

CAUTION$_3$: Do not run the tool without properly tightening connections. Running the tool with loose connections may damage the tool and cause malfunction.

CAUTION$_4$: Lift the AS Retrievable Bridge Plug by placing the sling or chain just below the pulling head. **DO NOT** lift the bridge plug by the upper slip body assembly (Fig. 2).

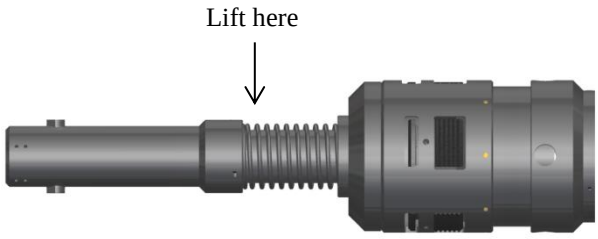

Fig. 2

The ASW Retrievable Bridge Plug is attached to a wireline setting tool (Size #20 Baker E-4 Wireline Setting Assembly or similar) via a Wireline Adapter Kit (WLAK). When attaching the inner adapter to the ASW Bridge Plug, 10 Driv-Lok pins should be used to ensure proper setting.

Once the setting tool and ASW Retrievable Bridge Plug are run to setting depth, the setting tool is activated. The ASW Retrievable Bridge Plug will set and the adapter kit will shear loose.

NOTE$_1$: This packer requires at least a 30 second burn on the wireline setting tool to ensure a proper set. A burn time less than 30 seconds may shear the setting tool from the packer before fully setting the packer.

When set with a hydraulic setting tool, the ASW Retrievable Bridge Plug is also attached with an adapter kit to the setting tool. Pressure, or pressure and tension, are used to set the plug and shear loose.

F) RELEASING PROCEDURES

Lower work string until the retrieving tool automatically latches to the ASW Retrievable Bridge Plug. Sand may be washed from the upper slip by circulating through the upper portion of the plug. Slack off weight, hold right-hand torque pick up to open the by-pass valve, and wait until differential pressure has equalized. Continue upward movement to release upper slips, relax packing elements and re-latch. The plug may now be removed or re-located.

F-1) EMERGENCY RELEASE

If the plug will not release conventionally, slack off re-set, then pick straight up to shear J-pins and release the plug (standard J-pins will shear at 50,000 lbs each – refer to Parts List for J-pins with other shear values) Once the J-pins are sheared, the tool cannot be moved down hole.

NOTE$_3$: Most of the component parts are manufactured from heat treated alloy steel. Therefore, extended exposure to corrosives can be detrimental to the metallurgy. Care in cleaning the tool soon after removal from the well can help extend the life of component parts. Close inspection of the parts is necessary, after removal, to identify any parts which require replacement.

G) STORAGE RECOMMENDATIONS

When preparing the tool for storage, follow the Pre-Installation Inspection Procedures. Re-assemble the tool with connections hand-tight only and in running position if applicable. Elements should be in a relaxed state—free from tension, compression, and other stresses that could cause deformation.

Store the tool, if possible, in an enclosed, temperature and humidity controlled environment. Avoid excessively high temperatures over long periods of time. Shield elastomeric parts from ultraviolet light sources. Keep tool dry and protected from condensation. Do not store in contact with or near volatile or corrosive chemicals. Do not store near ozone generating equipment or operations such as welding.

H) PRESSURE AFFECTED AREA GUIDE

When set downhole, the packer mandrel is subjected to a force created by differential pressure above or below the packer that acts on the pressure affected area (i.e., the piston effect). Depending on the tubing size and weight and the seal area of the packer the force created by differential pressure acts upwards or downwards on the packer mandrel. An upward force, designated as a negative (-) value, acts to push the packer mandrel up hole and must be accounted for when releasing the packer. A downward force, designated as a positive value, acts to push the packer mandrel down hole and must be accounted for when releasing the packer. Other factors (e.g., tubing movement due to temperature change) must be considered separately to determine all the forces acting on the packer.

PACKER SIZE (INCHES)	**PRESSURE AFFECTED AREA** (SQ. INCHES)	
	ABOVE	**BELOW**
	8.30 (DOWN)	-8.30 (UP)

Example: Consider a 11-3/4" ASW Bridge Plug set on tubing with a differential pressure of 3,000 psi in the annulus around the tubing above the packer. What is the force acting on the seal area of the mandrel?

To calculate the force (lbs) acting on the seal area of the mandrel, refer to the Pressure Affected Area Guide for a 11-3/4" ASW Bridge Plug. In this example, the differential pressure from above the packer acts on the seal area of the packer mandrel across a pressure affected area of 8.30 in^2. Multiplying the differential pressure (3,000 psi) by the pressure affected area (8.30 in^2) results in a force of 24,900 lbs. The piston effect on the packer mandrel is a downward force of 24,900 lbs.

I) ELASTOMER TRIM TEMPERATURE GUIDE

NITRILE (STD)			
TEMPERATURE RANGE (F°)	**DUROMETER**		
	END	**MIDDLE**	**END**
40° - 125°	80	70	80
125° - 250°	90	70	90
150° - 250°	90	80	90
250° +	Contact D&L Sales		

RUBBER TYPE	**TEMPERATURE RANGE**
NITRILE	40° - 250°F
HSN (HNBR)	70° - 300°F
VITON	100° - 350°F

J) RECOMMENDED HAND TOOLS

- VISE
- GLOVES
- ALLEN WRENCHES
- TAPE MEASURE
- O-RING PICK
- BAR
  - 1/2-INCH
  - 3/4-INCH
- PAINT BRUSH, 2-INCH
- PIPE WRENCH, 4-FT (2 EA)
- "CHEATER" PIPE, 4-FT LONG
- ADJUSTABLE WRENCH, 12-INCH
- CORDLESS DRILL, 18V
- SNAP RING SPREADER PLIERS
- ALIGNING PUNCH
- SCREWDRIVER SET, FLAT-TIPPED
- SOCKET SETS
  - 3/8-INCH DRIVE
  - 1/2-INCH DRIVE
- HAMMERS
  - SLEDGE
  - BALL PEEN
  - DEAD BLOW
- JACK STANDS

K) DISASSEMBLY

NOTE4: Ensure vise is capable of handling weight of tool.

NOTE5: Support tool during disassembly with jack stands as necessary.

K-1) Clamp upper cone (9) in vise.

K-1.1) Rotate and move J-slot mandrel (20) upwards to move J-pins (15) to lower landing in slot on J-slot mandrel (20).

CAUTION5: Compression spring (4) is compressed with spring tension against upper slip body assembly.

K-1.2) Unscrew and remove set screws (38) from body extension (28).

K-1.3) Unscrew body extension (28) from J-pin body (23) (**NOTE6**: Left-hand threads).

NOTE7: Drag block body assembly must be free to rotate.

K-1.4) Remove J-pins (15) from J-pin body (23).

K-1.5) Remove J-pin body (23) from J-slot mandrel (20).

K-1.6) Unscrew and remove shear screws (22) from body extension (28).

K-1.7) Unscrew and remove set screws (36) from drag block body (18). Rotate drag block retainer (21) as needed to access set screws.

K-1.8) Unscrew and remove body extension (28) from drag block body adapter (31) (**NOTE6**: Left-hand threads).

K-1.9) Unscrew and remove drag block body adapter (31) from drag block body (18).

K-1.10) Unscrew and remove rubber mandrel cap (19) from lower rubber mandrel (34).

K-1.11) Unscrew and remove set screws (39) from J-slot mandrel (20).

K-1.12) Unscrew and remove J-slot mandrel (20) from sealing mandrel (27).

K-1.13) Wedge lower slips (17) outward (if needed). Remove drag block body assembly and disassemble:

K-1.13.1) Remove drag block retainer (21) from drag block body (18).

K) DISASSEMBLY (cont'd)

K-1.13.2) Unscrew and remove cap screws (40) from drag block body (18).

K-1.13.3) Remove lower slip support (32) from drag block body (18).

K-1.13.4) Remove wedges (if needed). Remove lower slips (17) and lower slip springs (25) from drag block body (18).

K-1.14) Unscrew and remove lower cone (16) from rubber retainer (35).

K-1.15) Unscrew and remove set screws (39) from lower rubber mandrel (34).

K-1.16) Unscrew and remove lower rubber mandrel (34) from rubber mandrel (11).

K-1.17) Unscrew rubber mandrel (11) from center coupling (10).

K-1.18) Remove rubber mandrel assembly and disassemble:

K-1.18.1) Remove elements (13, 14), rubber spacers (12) and rubber retainer (35) from secondary rubber mandrel (3).

K-1.18.2) Remove secondary rubber mandrel (3) from rubber mandrel (11).

K-1.18.3) Remove o-ring (44) from rubber mandrel (11).

K-1.19) Unscrew and remove gage ring (29) from center coupling (10).

K-1.20) Moving to upper end of tool, unscrew and remove set screws (38) from pulling head (1).

K-1.21) Unscrew and remove pulling head (1) from upper mandrel (2).

K-1.22) Remove compression spring (4) from upper mandrel (2).

K-1.23) Unscrew and remove shear screws (22) from upper slip body (6).

K-1.24) Remove upper slip body assembly and disassemble:

K-1.24.1) Wedge releasing slips (7) and upper slips (8) outward (if needed). Unscrew and remove upper slip support (33) from upper slip body (6).

K-1.24.2) Remove wedges (if needed). Remove releasing slips (7), upper slips (8) and upper slip springs (26) from upper slip body (6).

K-1.25) Unscrew and remove set screws (39) from upper mandrel (2).

K-1.26) Unscrew and remove upper mandrel (2) from sealing mandrel (27).

K-1.27) Remove plug (5) from sealing mandrel (27).

K-1.27.1) Remove o-ring (42) from plug (5).

K-1.28) Remove sealing mandrel (27) from center coupling (10).

K-1.29) Unscrew and remove set screws (37) from upper cone (9).

K-1.30) Unscrew and remove center coupling (10) from upper cone (9).

K-1.30.1) Remove bonded seals (24) and o-ring (43) from center coupling (10).

K-1.30.1.1) Remove o-rings (41) from bonded seals (24).

K-1.31) Remove seal retaining ring (30) from upper cone (9).

K-2) Unclamp upper cone (9) and remove from vise.

NOTE$_8$: To redress tool assembly, follow disassembly instructions. It is recommended by D&L Oil Tools to replace all seals, elements, o-rings, shear screws, etc. when redressing tool.

L) ASSEMBLY

NOTE4: Ensure vise is capable of handling weight of tool.

NOTE5: Support tool during disassembly with jack stands as necessary.

NOTE9: Clean and inspect all parts. Replace all worn and damaged parts. Install parts in proper order, orientation and tighten/torque all connections properly.

CAUTION6: To ensure tool operates properly, install o-rings in o-ring grooves NOT thread reliefs (Fig. 3).

L-1) Clamp upper cone (9) in vise.

L-1.1) Install seal retaining ring (30) into upper cone (9).

L-1.2) Install o-ring (43) in o-ring groove in center coupling (10).

L-1.3) Install o-rings (41) in o-ring grooves in bonded seals (24).

L-1.4) Install bonded seals (24) in center coupling (10).

CAUTION7: Do not rip or tear o-rings during installation.

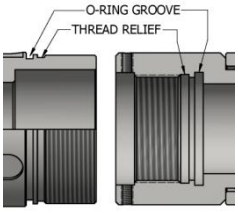

Fig. 3

L-1.5) Screw center coupling (10) into upper cone (9).

L-1.6) Screw set screws (37) into upper cone (9)

L-1.7) Screw gage ring (29) onto center coupling (10).

L-1.8) Install sealing mandrel (27) into center coupling (10).

CAUTION8: Do not damage bonded seals during installation.

L-1.9) Install o-ring (42) in o-ring groove in plug (5).

L-1.10) Install plug (5) into sealing mandrel (27).

CAUTION7: Do not rip or tear o-ring during installation.

Fig. 4

L-1.11) Screw upper mandrel (2) onto sealing mandrel (27).

L-1.12) Screw set screws (39) into upper mandrel (2).

L-1.13) Assemble upper slip body assembly and install:

L-1.13.1) Install upper slip springs (26), releasing slips (7), and upper slips (8) into upper slip body (6).

NOTE10: Install two (2 ea) springs per slip (Fig. 4).

L-1.13.2) Wedge releasing slips (7) and upper slips (8) outward. Screw upper slip support (33) into upper slip body (6). Remove wedges.

L-1.13.3) Install upper slip body assembly onto upper mandrel (2). Align threaded holes in upper slip body (6) with groove in upper cone (9).

L-1.13.4) Screw shear screws (22) into upper slip body (6). Tighten until shear screws (22) make contact with upper cone (9). Back shear screws (22) out 1/4 turn.

L-1.14) Install compression spring (4) onto upper mandrel (2).

L-1.15) Screw pulling head (1) onto upper mandrel (2).

L-1.16) Screw set screws (38) into pulling head (1).

L-1.17) Assemble rubber mandrel assembly and install:

L-1.17.1) Install o-ring (44) in o-ring groove in rubber mandrel (11).

L-1.17.2) Install secondary rubber mandrel (3) onto rubber mandrel (11).

CAUTION7: Do not rip or tear o-ring during installation.

L-1.17.3) Install rubber retainer (35), elements (13, 14) and rubber spacers (12) onto secondary rubber mandrel (3).

L) ASSEMBLY (cont'd)

L-1.17.4) Install rubber mandrel assembly onto sealing mandrel (27). Screw rubber mandrel (11) into center coupling (10).

CAUTION$_7$: Do not rip or tear o-ring during installation.

L-1.18) Screw lower rubber mandrel (34) onto rubber mandrel (11).

L-1.19) Screw set screws (39) into lower rubber mandrel (34).

L-1.20) Screw lower cone (16) into rubber retainer (35).

L-1.21) Screw J-slot mandrel (20) onto sealing mandrel (27).

L-1.22) Screw set screws (39) into J-slot mandrel (20).

L-1.23) Assemble drag block body assembly and install:

L-1.23.1) Install lower slips (17) and lower slip springs (25) into drag block body (18). Wedge lower slips (17) outward.

Fig. 5

NOTE$_{11}$: Install two (2ea) springs per slip (Fig. 5).

L-1.23.2) Install lower slip support (32) into drag block body (18). Align holes in lower slip support (32) with threaded holes in drag block body (18).

L-1.23.3) Screw cap screws (40) into drag block body (18). Remove wedges.

L-1.23.4) Install drag block retainer (21) onto drag block body (18).

L-1.23.5) Install drag block body assembly onto lower rubber mandrel (34).

L-1.24) Screw rubber mandrel cap (19) onto lower rubber mandrel (34).

L-1.25) Screw drag block body adapter (31) into drag block body (18).

L-1.26) Screw body extension (28) into drag block body adapter (31) (**NOTE**$_6$: Left-hand threads).

L-1.27) Screw set screws (36) into drag block body (18). Move drag block retainer (21) to access threaded holes as necessary.

L-1.28) Move body extension (28) and drag block body assembly up out of the way temporarily.

L-1.29) Install J-pin body (23) onto J-slot mandrel (20).

L-1.30) Align holes in J-pin body (23) with lower landing in slot in J-slot mandrel (20). Install J-pins (15) into J-pin body (23) (Fig.6).

L-1.31) Slide drag block body assembly and body extension (28) down to J-pin body (23). Screw body extension (28) onto J-pin body (23) (**NOTE**$_6$: Left-hand threads).

Fig. 6

NOTE$_7$: Drag block body assembly must be free to rotate.

L-1.32) Screw set screws (38) into body extension (28).

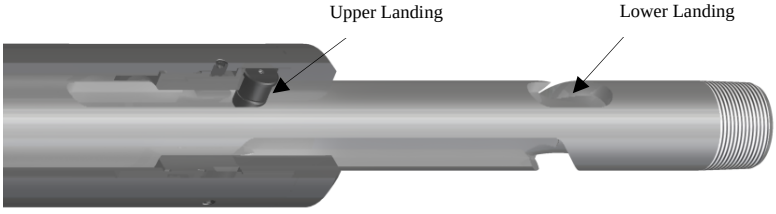

Fig. 7

L-1.33) Move J-pins (15) to upper landing in slot in J-slot mandrel (20) (Fig. 7). Rotate and move J-slot mandrel (20) downwards as necessary.

CAUTION$_5$: Compression spring (4) will be compressed with spring tension against upper slip body assembly.

L) ASSEMBLY (cont'd)

L-1.34) Align threaded holes in body extension (28) with groove in rubber mandrel cap (19). Screw shear screws (22) into body extension (28). Tighten until shear screws (22) make contact with rubber mandrel cap (19). Back shear screws (22) out 1/4 turn.

L-2) Unclamp upper cone (9) from vise and remove assembled tool.

M) PARTS LIST

ITEM	QTY	DESCRIPTION	MATERIAL	P/N 72411RR
1	1	PULLING HEAD	DLMS110	72485715
2	1	UPPER MANDREL	DLMS110	72585210
3	1	SECONDARY RUBBER MANDREL	DLMS35	60311221
4	1	COMPRESSION SPRING	DLMCRSP	60373920
5	1	PLUG	DLMS110	72585216
6	1	UPPER SLIP BODY	DLMS110	72411320
7	2	RELEASING SLIP	DLMS110	60011125
8	3	UPPER SLIP W/ CARBIDE	DLMS110	72511115C
9	1	UPPER CONE	DLMS110	72411410
10	1	CENTER COUPLING	DLMS110	72511620
11	1	RUBBER MANDREL	DLMS110	72585220
12	2	RUBBER SPACER	DLMS35	60211X840
13	1	ELEMENT	70 DURO NITRILE	60211X511
14	2	ELEMENT	90 DURO NITRILE	60211X513
15	2	J-PIN **NOTE12**: Shear value is stamped on J-pin.	DLMS110	72585870-15 (15,000#) 72585870-25 (25,000#) 72585870 (STD 50,000#)
16	1	LOWER CONE	DLMS110	60311420
17	5	LOWER SLIP W/ CARBIDE	DLMS110	60011135C
18	1	DRAG BLOCK BODY	DLMS110	60311X335HT
19	1	RUBBER MANDREL CAP	DLMS110	72485230
20	1	J-BODY	DLMS110	72595230
21	1	DRAG BLOCK RETAINER	DLMS35	60311X911
22	16	SHEAR SCREW (2375#)	DLM360BRS	60100990
23	1	J-PIN BODY	DLMS110	72585875

M) PARTS LIST (cont'd)

ITEM	QTY	DESCRIPTION	MATERIAL	P/N 72411RR
24	2	BONDED SEAL	90 DURO NITRILE	60070520
25	10	LOWER SLIP SPRING	-	7170901
26	10	UPPER SLIP SPRING	DLMINC625	DL94830
27	1	SEALING MANDREL	DLMS110	72595214
28	1	BODY EXTENSION	DLMS110	72495370
29	1	GAGE RING	DLMS60	60211X830
30	1	SEAL RETAINING RING	DLMS35	72511225
31	1	DRAG BLOCK BODY ADAPTER	DLMS110	72511355
32	1	LOWER SLIP SUPPORT	DLMS60	60311X912
33	1	UPPER SLIP SUPPORT	DLMS110	72411880
34	1	LOWER RUBBER MANDREL	DLMS110	72595221
35	1	RUBBER RETAINER	DLMS35	60211X850
36	3	SET SCREW 1/4-20 UNC X 1/2	STEEL	SSS025C050
37	3	SET SCREW 5/16-18 UNC X 7/16	STEEL	SSS031C043
38	6	SET SCREW 3/8-16 UNC X 1/2	STEEL	SSS037C050
39	9	SET SCREW 3/8-16 UNC X 3/8	STEEL	SSS037C037
40	2	CAP SCREW 1/2-13 UNC X 5/8	STEEL	SCS050C062
41	2	153 O-RING	90 DURO NITRILE	90153
42	1	228 O-RING	90 DURO NITRILE	90228
43	1	252 O-RING	90 DURO NITRILE	90252
44	1	254 O-RING	90 DURO NITRILE	90254
45	10	DRIV-LOK PIN (4800#) 5/16 X 1	STEEL	DLP031100*

*Refer to WLAK Technical Manual for placement.

REDRESS KIT (RDK)		72411050
ASSEMBLED WEIGHT		856 LBS

M) PARTS LIST (cont'd)

M-1) ELASTOMER TRIM OPTIONS

NOTE13: For temperature range, refer to Elastomer Trim Temperature Guide.

M-1.1) HSN

ITEM	QTY	DESCRIPTION	MATERIAL	P/N 72411RRH
13	1	ELEMENT	70 DURO HSN	60211X511H
14	2	ELEMENT	90 DURO HSN	60211X513H
24	2	BONDED SEAL	90 DURO HSN	60070520H
41	2	153 O-RING	90 DURO HSN	90153H
42	1	228 O-RING	90 DURO HSN	90228H
43	1	252 O-RING	90 DURO HSN	90252H
44	1	254 O-RING	90 DURO HSN	90254H

REDRESS KIT (RDK)		72411050H

M-1.2) VITON

ITEM	QTY	DESCRIPTION	MATERIAL	P/N 72411RRV
13	1	ELEMENT	70 DURO VITON	60211X511V
14	2	ELEMENT	90 DURO VITON	60211X513V
24	2	BONDED SEAL	90 DURO VITON	60070520V
41	2	153 O-RING	90 DURO VITON	90153V
42	1	228 O-RING	90 DURO VITON	90228V
43	1	252 O-RING	90 DURO VITON	90252V
44	1	254 O-RING	90 DURO VITON	90254V

REDRESS KIT (RDK)		72411050V

N) TECHNICAL ILLUSTRATION

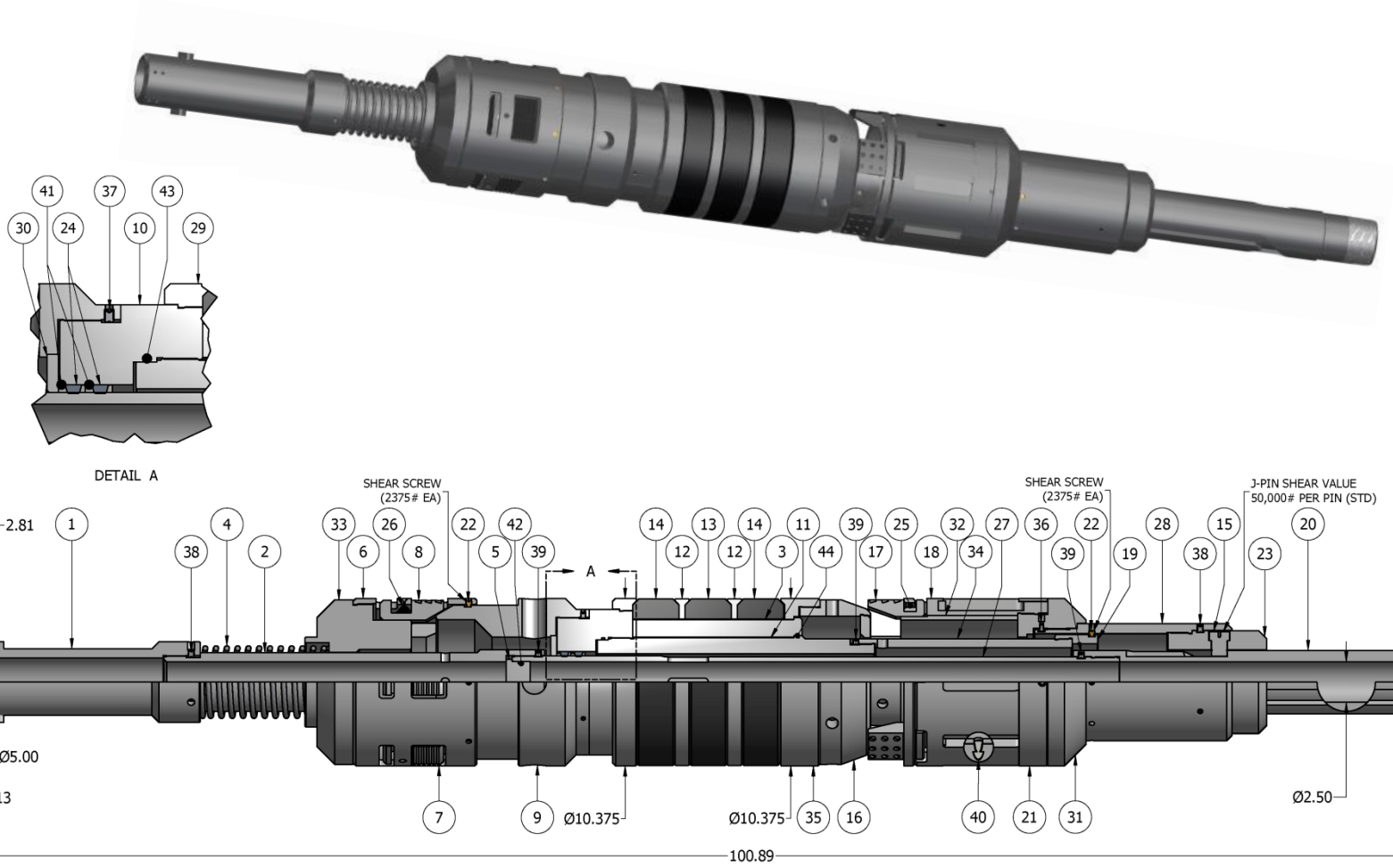

O) REVISION HISTORY

DATE	REVISION	DESCRIPTION OF CHANGES	REVISED BY	APPROVED BY
02/20/2020	C	Added General Screw Torque Recommendations, Pressure Affected Area Guide; Revised Elastomer Trim Temp. Guide nitrile rating, P/N DL94830 qty was 5	J.Anderson	N.Banker
12/14/2015	B	Revised Elastomer Durometer Temperatures – Nitrile (90/80/90 Duro) was 250° - 300°F, Nitrile (Contact D&L Sales) was 300°F +, Rubber Type Temperature Ranges – Nitrile was 70° - 300°F, HSN was 70° - 325°F	J.Anderson	B.Oligschlaeger
10/14/2015	A	Create new manual	-	-