A) DESCRIPTION

The Hydroset II-A Packer is a hydraulic set, mechanically held dual string production packer normally run above a single string hydraulic set or wireline set seal bore packer. Because no tubing manipulation is required to set this packer, the well head can be installed and flanged up before setting.

This packer is available with short string or long string setting capabilities and a variety of tubing connections. This packer is also adaptable for electrical submersible pump applications. This packer features a sequential upper slip release system designed to release each slip individually to reduce the pull required to release the packer. The angles on the upper slips and upper slip body result in the slips releasing smoothly from the casing.

B) SPECIFICATION GUIDE

CASING		
SIZE (INCHES)	**WEIGHT** (LBS/FT)	**RECOMMENDED HOLE SIZE** (INCHES)
9-5/8	36.0 – 47.0	8.681 – 8.921

TOOL			PART NUMBER
GAGE OD (INCHES)	**LONG STRING ID** (INCHES)	**SHORT STRING ID** (INCHES)	
8.500	2.39	1.50	94595-BAC-BBA 94595H-BAC-BBA[1] 94595V-BAC-BBA[2] 94595C-BAC-BBA[3] 94595HC-BAC-BBA[4] 94595VC-BAC-BBA[5]

Tool Options: [1]HSN, [2]Viton, [3]Nitrile, Carbide, [4]HSN, Carbide, [5]Viton, Carbide

THREAD CONNECTION	
LONG STRING BOX UP / PIN DOWN	**SHORT STRING** BOX DOWN
2-7/8” EUE	1.900” NUE

DIFFERENTIAL PRESSURE (MAX)	TENSILE LOAD THRU TOOL (MAX)
5,000 PSI	61,000 LBS*

*Using all eight (8 qty) releasing shear screws.

SETTING				
SETTING AREA (SQ INCHES)	**SHEAR VALUE** (PSI/SCREW)	**INITIATION PRESSURE** (PSI)	**MINIMUM SETTING PRESSURE** (PSI)	**RECOMMENDED SETTING PRESSURE** (PSI)
35.42	67	805	1,087	1,630

C) PRE-INSTALLATION INSPECTION PROCEDURES

CAUTION1: D&L ships tool connections made-up **HAND TIGHT**—labeled with hand-tight tape on the tool (Fig. 1)—unless stated otherwise. Tighten/torque all connections properly before operating tool.

Fig. 1

GENERAL THREAD CONNECTION TORQUE RECOMMENDATIONS			
STUB ACME / ACME THREADS	**INTERNAL TAPERED TUBING THREADS**		**PREMIUM THREADS**
	UP TO 2-3/8”	**GREATER THAN 2-3/8”**	
600 – 800 FT-LBS	600 – 800 FT-LBS	800 – 1,200 FT-LBS	Consult thread manufacturer’s recommendations.

GENERAL SCREW TORQUE RECOMMENDATIONS									
SCREW SIZE (INCHES)	#6	#8	#10	1/4	5/16	3/8	7/16	1/2	5/8 and larger
TORQUE RANGE (INCH-POUNDS)	5 – 8	10 – 15	18 – 25	25 – 40	50 – 80	90 – 135	160 – 210	250 – 330	450 - 650

Before first use, D&L recommends disassembly and inspection of the tool unless stated otherwise. Ensure parts have not been damaged during shipping. Replace damaged parts with D&L replacement parts. Contact D&L sales for replacement part information.

Re-assemble the tool after inspection. Install parts in the correct order and orientation. Properly tighten connections.

Before re-using the tool, D&L recommends disassembly and inspection of the tool. Clean parts and ensure parts are in good working condition. Replace worn or damaged parts with D&L replacement parts.

When redressing the tool, D&L recommends replacement of all seals, elements, o-rings, shear screws, etc. Contact D&L sales for redress kit and/or other replacement part information.

D) OPERATION

CAUTION2: Do not run the tool without properly tightening connections. Running the tool with loose connections may damage the tool and cause malfunction.

When tubing pressure is applied to the packer, the inlet port allows pressure differential to be present in the setting chamber. This differential forces the setting mandrel to separate from the setting cylinder, shearing the setting shear screws. The setting cylinder is forced down, which shears the lower slip body shear screws and sets the lower slips. The setting mandrel is forced up, which shears the upper slip body shear screws, and sets the upper slips and packs off the elements. Any relative motion between the setting cylinder and the setting mandrel is held in place by the lock ring, which will ratchet in only one direction. With a pressure differential from above, the force is transferred through the outer components of the packer and is supported by the lower slips. With the pressure differential from below, the force transfers through the outer components of the packer and is supported by the upper slips.

D-1) SETTING PROCEDURES

Running speed is critical, especially in heavy or viscous fluid where excess speed can result in swabbing off the packing element or in creating pressure waves which could lead to creating a preset condition. As a guide it is recommended that running speed should not be more than 30 seconds per joint (range II or 30 feet). **Do not exceed this speed**, particularly when running the packer in the heaviest weight casing for the range for which the packer is dressed.

A run in the well with a junk basket and suitable sized gauge ring or a bit and scraper is strongly recommended prior to running. The location of any tight spots should be noted and the running speed for the packer through these spots should be reduced.

D) OPERATION (cont’d)

Being a hydraulically set packer, it can be subject to preset conditions by pressure waves through the fluid. A slow steady running speed should be used and sudden stops and starts, such as when setting or pulling slips, should be avoided. Make up the packer to the tubing string in the desired position and to the required torque.

Allow at least 30 minutes for the packer to equalize thermally before setting. Temporarily plug the long string below the packer and apply a minimum of 1,087 psi differential in the tubing at the packer and hold it for 30 minutes. The packer should now be fully set and can be pressure tested if desired.

D-2) RELEASING PROCEDURES

The packer is released by a straight pick up on the long string. The shear release value is adjustable from 15,000 lbs to 40,000 lbs (in 5,000 lbs. increments—see technical illustration). A minimum of 3 shear screws are required.

The long string mandrel can carry a maximum of 101,000 lbs below the packer. If the amount of tension required to shear the releasing shear screws plus the weight below the tool exceeds 101,000 lbs, a Telescoping Union should be run directly below the packer.

E) ELASTOMER TRIM TEMPERATURE GUIDE

TEMPERATURE RANGE (F°)			
TEMPERATURE RANGE (F°)	DUROMETER		
	END	MIDDLE	END
40° - 125°	60	60	60
125° - 300°	80	70	80
300° +	Contact D&L Sales		

RUBBER TYPE	TEMPERATURE RANGE
NITRILE	40° - 250°F
HSN (HNBR)	70° - 300°F
VITON	100° - 350°F

F) RECOMMENDED HAND TOOLS

- VISE
- GLOVES
- ALLEN WRENCHES
- TAPE MEASURE
- O-RING PICK
- BAR
  - 1/2-INCH
  - 3/4-INCH
- PAINT BRUSH, 2-INCH
- PIPE WRENCH, 3-FT (2 EA)
- “CHEATER” PIPE, 4-FT LONG
- ADJUSTABLE WRENCH, 12-INCH
- CORDLESS DRILL, 18V
- SNAP RING SPREADER PLIERS
- ALIGNING PUNCH
- BOLTS, 1/4-20 X 1-1/4” LONG (4EA)
- SCREWDRIVER SET, FLAT-TIPPED
- SOCKET SETS
  - 3/8-INCH DRIVE
  - 1/2-INCH DRIVE
- HAMMERS
  - SLEDGE
  - BALL PEEN
  - DEAD BLOW

G) DISASSEMBLY

G-1) Clamp flat top (3) in vise.

G-1.1) Starting at upper end of tool, unscrew and remove top sub (1) from handling pup (2).

G-1.1.1) Remove o-rings (27) from top sub (1).

G-1.2) Unscrew and remove handling pup (2) from flat top (3).

G-1.3) Moving to lower end of tool, unscrew and remove bottom sub (21) from long string mandrel (4).

G-1.4) Unscrew and remove shear screws (20) from shear pin retainer (18).

G-1.5) Unscrew and remove shear pin retainer (18) from lower slip body cap (19).

G-1.6) Unscrew and remove cap screws (23) from lower cone (16).

G-1.7) Unscrew and remove shear screws (24) from lower slip body (15).

G) DISASSEMBLY (cont’d)

G-1.8) Wedge lower slips (17) outwards (if needed). Remove lower slip body assembly and disassemble:

G-1.8.1) Remove wedges (if needed). Remove lower slips (17) and slip springs (25) from lower slip body (15).

G-1.8.2) Unscrew and separate lower slip body (15) from lower slip body cap (19).

G-1.8.2.1)Remove o-rings (26) from lower slip body cap (19).

G-1.9) Remove pick-up ring (22) from long string mandrel (4)

G-1.10) Remove setting mandrel assembly and disassemble:

G-1.10.1) Unscrew and remove lower cone (16) from setting chamber (10).

G-1.10.1.1) Remove o-rings (26, 27, 28) from lower cone (16).

G-1.10.2) Unscrew and remove lock ring (11) from lower end of lock ring (13).

G-1.10.3) Unscrew and remove shear screws (24) from setting chamber (10).

G-1.10.4) Remove setting chamber (10) from setting mandrel (9).

G-1.10.4.1) Remove o-rings (29) from setting chamber (10).

G-1.10.5) Remove o-rings (26, 27) from setting mandrel (9).

G-1.11) Remove elements (13, 14) and rubber spacers (12) from mandrels (4, 5).

G-1.12) Unscrew and remove long string mandrel (4) and short string mandrel (5) from flat top (3).

CAUTION$_3$: Do **NOT** wrench or clamp on seal surfaces.

G-1.13) Unscrew and remove cap screws (23) from upper cone (6).

G-1.14) Unscrew and remove shear screws (24) from upper slip body (7).

G-1.15) Wedge upper slips (8) outwards (if needed). Remove upper cone (6) from upper slip body (7).

G-1.15.1) Remove o-rings (26, 27) from upper cone (6).

G-1.15.2) Remove wedges (if needed). Remove upper slips (8) and slip springs (25) from upper slip body (7).

G-1.16) Unscrew and remove upper slip body (7) from flat top (3).

G-2) Unclamp and remove flat top (3) from vise.

G-2.1) Remove o-rings (26, 27) from flat top (3).

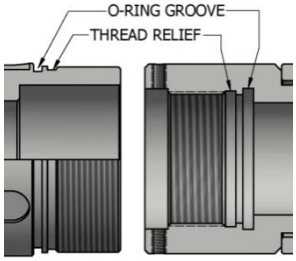

Fig. 2

H) ASSEMBLY

NOTE$_1$: Clean and inspect all parts. Replace all worn and damaged parts. Install parts in proper order, and orientation and tighten/torque all connections properly.

CAUTION$_4$: To ensure tool operates properly, install o-rings in o-ring grooves **NOT** thread reliefs (Fig. 2).

H-1) Install o-rings (26, 27) in o-ring grooves in flat top (3).

H-2) Clamp flat top (3) in vise

H-2.1) Screw upper slip body (7) onto flat top (3).

H-2.2) Assemble upper slip assemblies and install:

H-2.2.1) Place slip springs (25) onto upper slips (8)

NOTE$_2$: Install three (3 ea) springs per slip (Fig. 3).

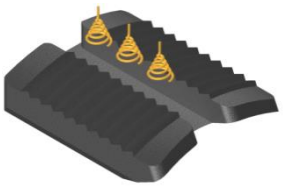

Fig. 3

H) ASSEMBLY (cont’d)

H-2.2.2) Install upper slips into upper slip body (7). Wedge slips outwards.

CAUTION$_5$: Slips must be fully extended to prevent hitting the mandrels when installed.

H-2.3) Install o-rings (26, 27) in o-ring grooves in upper cone (6).

H-2.4) Install upper cone (6) into upper slip body (7). Align threaded holes in upper cone (6) with pocket holes in upper slip body (7). Align threaded holes in upper cone (6) with slots in upper slip body (7).

H-2.5) Screw cap screws (23) into upper cone (6).

H-2.6) Screw shear screws (24) into upper slip body (7). Tighten until shear screws (24) contact upper cone (6). Back shear screws (24) out 1/4 turn.

H-2.7) Screw short string mandrel (5) and long string mandrel (4) into flat top (3). Remove wedges from upper slips (8).

CAUTION$_3$: Do NOT wrench or clamp on seal surfaces.

CAUTION$_6$: Do NOT rip or tear o-rings while installing.

H-2.8) Install elements (13, 14) and rubber spacers (12) onto mandrels (4, 5).

H-2.9) Assemble setting mandrel assembly and install:

H-2.9.1) Install o-rings (26, 27) in o-ring grooves in setting mandrel (9).

H-2.9.2) Install o-rings (29) in o-ring grooves in setting chamber (10).

H-2.9.3) Gently tap setting mandrel (9) into setting chamber (10). Align shear screw groove in setting mandrel (9) with threaded holes in setting chamber (10).

CAUTION$_6$: Do NOT rip or tear o-ring while installing.

H-2.9.4) Temporarily screw one shear screw (24) into setting chamber (10) to hold parts together.

H-2.9.5) Install lock ring (11) into bottom end of setting chamber (10) and screw onto setting mandrel (9).

H-2.9.6) Install o-rings (26, 27, 28) in o-ring grooves in lower cone (16).

H-2.9.7) CAREFULLY screw lower cone (16) into setting chamber (10) until they shoulder.

CAUTION$_6$: Do NOT rip or tear o-rings while installing.

H-2.9.8) Rotate setting chamber (10) and lower cone (16) in right-hand motion to align holes for mandrels (4, 5). Loosen shear screw (8) from setting chamber (10) as necessary.

H-2.9.9) Screw shear screws (24) into setting chamber (10). Tighten until shear screws (24) contact setting mandrel (9). Back shear screws (24) out 1/4 turn.

H-2.9.10) Install setting mandrel assembly onto mandrels (4, 5).

CAUTION$_6$: Do NOT rip or tear o-rings while installing.

H-2.10) Install pick-up ring (22) in pick-up ring groove in long string mandrel (4).

H-2.11) Assemble lower slip body assembly and install:

H-2.11.1) Install o-rings (26) in o-ring groove in lower slip body cap (19).

H-2.11.2) Screw lower slip body (15) onto lower slip body cap (19).

H) ASSEMBLY (cont’d)

H-2.11.3) Assemble lower slip assemblies and install:

H-2.11.3.1) Place slip springs (25) onto lower slips (17).

NOTE5: Install three (3 ea) springs per slip (Fig. 4).

H-2.11.3.2) Install lower slip assemblies onto lower slip body (15). Wedge slips outwards.

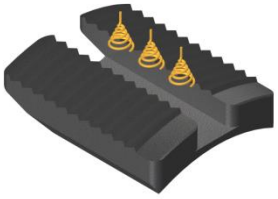

Fig. 4

H-2.11.4) Install lower slip body assembly onto mandrels (4, 5) and onto lower cone (16).

H-2.11.5) Align threaded holes in lower slip body (15) with pocket holes in lower cone (16). Align threaded holes in lower cone (16) with slots in lower slip body (15). Remove wedges from lower slips (17).

NOTE3: Back off lower slip body cap (19) as needed to align mandrels (4, 5).

CAUTION6: Do NOT rip or tear o-rings while installing.

H-2.12) Screw cap screws (23) into lower cone (16).

H-2.13) Screw shear screws (24) into lower slip body (15). Tighten until shear screws (24) contact lower cone (16). Back shear screws (24) out 1/4 turn.

H-2.14) Screw shear pin retainer (18) into lower slip body cap (19) until shouldered. Back off shear pin retainer (18) as needed to align threaded holes in shear pin retainer (18) with shear screw groove in long string mandrel (4).

H-2.15) Screw shear screws (20) into shear pin retainer (18). Tighten until shear screws (20) contact long string mandrel (4). Back shear screws (20) out 1/4 turn.

NOTE4: Install a minimum of three (3 qty) shear screws (20). Install additional shear screws (20) as needed to achieve desired shear value.

H-2.16) Install o-rings (30) in o-ring grooves of bottom sub (21).

H-2.17) Screw bottom sub (21) onto long string mandrel (4).

CAUTION6: Do NOT rip or tear o-rings while installing.

H-2.18) Moving to upper end of tool, screw handling pup (2) into flat top (3).

CAUTION6: Do NOT rip or tear o-rings while installing.

H-2.19) Install o-rings (27) in o-ring grooves in top sub (1).

H-2.20) Screw top sub (1) into handling pup (2).

CAUTION6: Do NOT rip or tear o-rings while installing.

H-3) Unclamp flat top (3) from vise and remove assembled tool.

NOTE17: If pressure testing of the packer is desired, refer to technical manual *DL-945-9625-1206*. Pressure testing of the packer is not mandatory.

I) PARTS LIST

ITEM	QTY	DESCRIPTION	MATERIAL	P/N 94595-BAC-BBA
1	1	TOP SUB	DLMS80	90427610
2	1	HANDLING PUP	DLMS110	90427226-C
3	1	FLAT TOP	DLMS80	94596600CA
4	1	LONG STRING MANDREL	DLMS110	94527200-SA
5	1	SHORT STRING MANDREL	DLMS80	94519210
6	1	UPPER CONE	DLMS80	94595400CA
7	1	UPPER SLIP BODY	DLMS80	94596320
8	4	UPPER SLIP	DLMS35	90595115
9	1	SETTING MANDREL	DLMS80	94595751CA
10	1	SETTING CHAMBER	DLMS110	94596755
11	1	LOCK RING	DLMS80	94596725
12	2	RUBBER SPACER	DLMS80	94595840CA
13	1	ELEMENT	70 DURO NITRILE	94595511CA
14	2	ELEMENT	80 DURO NITRILE	94595512CA
15	1	LOWER SLIP BODY	DLMS80	94596315
16	1	LOWER CONE	DLMS80	94595420CA
17	4	LOWER SLIP	DLMS35	90595131
18	1	SHEAR PIN RETAINER	DLMS80	94570741
19	1	LOWER SLIP BODY CAP	DLMS80	94596336CA
20	8	SHEAR SCREW (5000#)	DLM464BRS	65050902
21	1	LONG STRING BOTTOM SUB	DLMS80	90427631
22	1	PICK-UP RING	DLMS110	94570761
23	4	3/8-16 UNC X 3/8 SOCKET CAP SCREW	STEEL	SCS037C037
24	20	SHEAR SCREW (2375#)	DLM360BRS	60100990
25	24	SLIP SPRING	DLMINC750	DL94829
26	9	134 O-RING	90 DURO NITRILE	90134
27	11	150 O-RING	90 DURO NITRILE	90150
28	2	169 O-RING	90 DURO NITRILE	90169
29	2	170 O-RING	90 DURO NITRILE	90170
30	2	233 O-RING	90 DURO NITRILE	90233

REDRESS KIT (RDK)		94595-C-A-050
ASSEMBLED WEIGHT		658 LBS

I) PARTS LIST (cont’d)

I-1) ELASTOMER TRIM OPTIONS

NOTE$_2$: For temperature range, refer to Elastomer Trim Temperature Guide.

I-1.1) HSN

ITEM	QTY	DESCRIPTION	MATERIAL	P/N 94595H-BAC-BBA
13	1	ELEMENT	70 DURO HSN	94595511CAH
14	2	ELEMENT	80 DURO HSN	94595512CAH
26	9	134 O-RING	90 DURO HSN	90134H
27	11	150 O-RING	90 DURO HSN	90150H
28	2	169 O-RING	90 DURO HSN	90169H
29	2	170 O-RING	90 DURO HSN	90170H
30	2	233 O-RING	90 DURO HSN	90233H

REDRESS KIT (RDK)		94595-C-A-050H

I-1.2) VITON

ITEM	QTY	DESCRIPTION	MATERIAL	P/N 94595V-BAC-BBA
13	1	ELEMENT	70 DURO VITON	94595511CAV
14	2	ELEMENT	80 DURO VITON	94595512CAV
26	9	134 O-RING	90 DURO VITON	90134V
27	11	150 O-RING	90 DURO VITON	90150V
28	2	169 O-RING	90 DURO VITON	90169V
29	2	170 O-RING	90 DURO VITON	90170V
30	2	233 O-RING	90 DURO VITON	90233V

REDRESS KIT (RDK)		94595-C-A-050V

I-2) CARBIDE OPTION

ITEM	QTY	DESCRIPTION	MATERIAL	P/N 94595C-BAC-BBA
8	4	CARBIDE UPPER SLIP	DLMS110	90595115C
17	4	CARBIDE LOWER SLIP	DLMS110	90595131C

J) TECHNICAL ILLUSTRATION

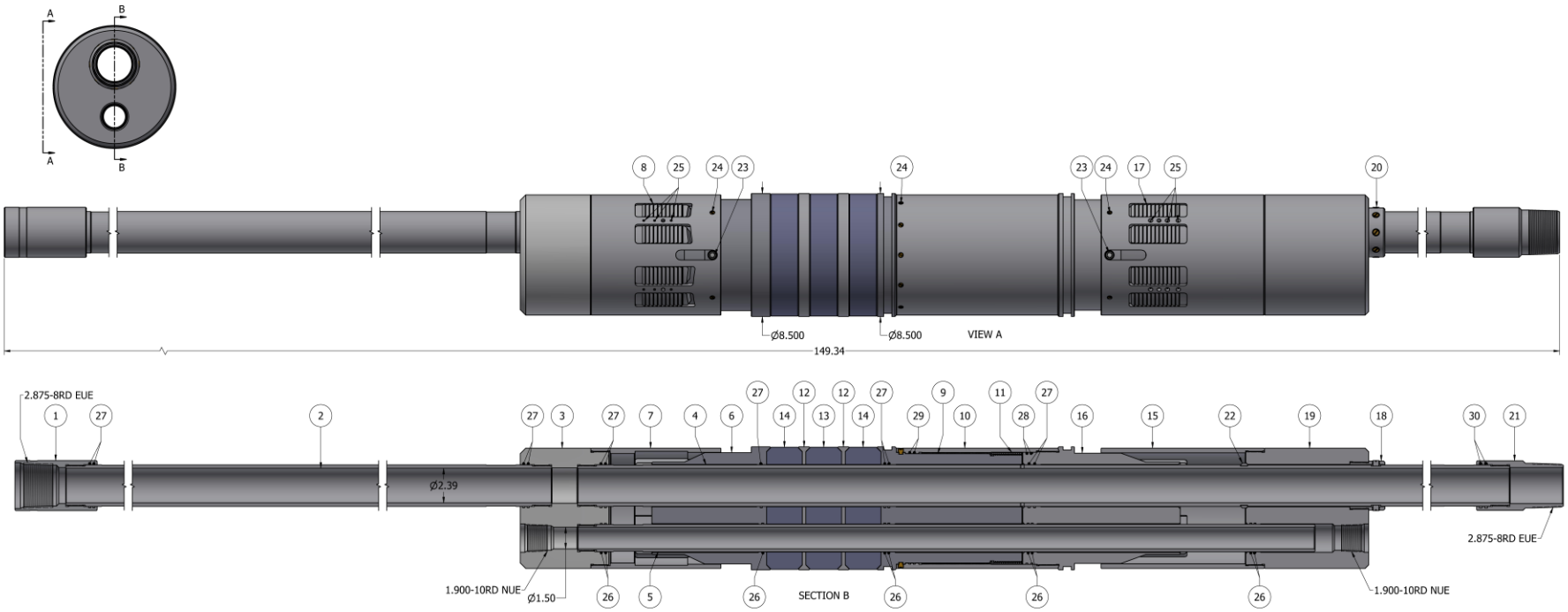

K) REVISION HISTORY

DATE	REVISION	DESCRIPTION OF CHANGES	REVISED BY	APPROVED BY
02/29/2024	B	Correct RDK P/Ns	J.Anderson	E.Visaez
05/23/2023	A	Created manual	-	-