A) DESCRIPTION

The Type GV Cup Packer is an economical means of isolating casing leaks and depleted zones and is also a production or injection packer for low pressure applications. Depending on application, this packer can be run with cups opposed or in the same direction. This packer is also available with packing element back-up rings for higher pressure applications and comes in a full range of tubing and casing sizes in two-cup or four-cup models.

B) SPECIFICATION GUIDE

CASING			TOOL		THREAD CONNECTION BOX UP / PIN DOWN	PART NUMBER
SIZE (INCHES)	**WEIGHT** (LBS/FT)	**RECOMMENDED HOLE SIZE** (INCHES)	**GAGE OD** (INCHES)	**NOMINAL ID** (INCHES)		
7	17.0 – 29.0	6.184 – 6.538	6.000	2.50	2-7/8 EUE	43971-C 43971H-C[1] 43971V-C[2]

Elastomer Trim Options: [1]HSN, [2]Viton

DIFFERENTIAL PRESSURE (MAX)	TENSILE LOAD THRU TOOL (MAX)	RECOMMENDED RUNNING DEPTH (MAX)	RECOMMENDED RUNNING SPEED (MAX)
5,000 PSI	180,000 LBS	7,000 FT	60 FT/MIN

C) PRE-INSTALLATION INSPECTION PROCEDURES

CAUTION$_1$: D&L ships tool connections made-up **HAND TIGHT**—labeled with hand-tight tape on the tool (Fig. 1)—unless stated otherwise. Tighten/torque all connections properly before operating tool.

Fig. 1

GENERAL THREAD CONNECTION TORQUE RECOMMENDATIONS			
STUB ACME / ACME THREADS	**INTERNAL TAPERED TUBING THREADS**		**PREMIUM THREADS**
	UP TO 2-3/8”	**GREATER THAN 2-3/8”**	
600 – 800 FT-LBS	600 – 800 FT-LBS	800 – 1,200 FT-LBS	Consult thread manufacturer’s recommendations.

Before first use, D&L recommends disassembly and inspection of the tool unless stated otherwise. Ensure parts have not been damaged during shipping. Replace damaged parts with D&L replacement parts. Contact D&L sales for replacement part information.

Re-assemble the tool after inspection. Install parts in the correct order and orientation. Properly tighten connections.

Before re-using the tool, D&L recommends disassembly and inspection of the tool. Clean parts and ensure parts are in good working condition. Replace worn or damaged parts with D&L replacement parts.

When redressing the tool, D&L recommends replacement of all packing elements, o-rings, etc. Contact D&L sales for redress kit and/or other replacement part information.

D) SETTING PROCEDURES

CAUTION$_2$: Do not run the tool without properly tightening connections. Running the tool with loose connections may damage the tool and cause malfunction.

Trip packer to desired depth.

E) RELEASING PROCEDURES

Pull work string to remove packer from well bore.

F) STORAGE RECOMMENDATIONS

When preparing the tool for storage, follow the Pre-Installation Inspection Procedures. Re-assemble the tool with connections hand-tight only and in running position if applicable. Packing elements should be in a relaxed state—free from tension, compression, and other stresses that could cause deformation.

Store the tool, if possible, in an enclosed, temperature and humidity controlled environment. Avoid excessively high temperatures over long periods of time. Shield elastomeric parts from ultraviolet light sources. Keep tool dry and protected from condensation. Do not store in contact with or near volatile or corrosive chemicals. Do not store near ozone generating equipment or operations such as welding.

G) ELASTOMER TRIM TEMPERATURE GUIDE

RUBBER TYPE	TEMPERATURE RANGE
NITRILE	70° - 250°F
HSN (HNBR)	70° - 300°F
VITON	100° - 350°F

H) RECOMMENDED HAND TOOLS

- VISE
- GLOVES
- ALLEN WRENCHES
- TAPE MEASURE
- O-RING PICK
- BAR
  - 1/2-INCH
  - 3/4-INCH
- PAINT BRUSH, 2-INCH
- PIPE WRENCH, 3-FT (2 EA)
- “CHEATER” PIPE, 4-FT LONG
- ADJUSTABLE WRENCH, 12-INCH
- CORDLESS DRILL, 18V
- SNAP RING SPREADER PLIERS
- ALIGNING PUNCH
- SCREWDRIVER SET, FLAT-TIPPED
- SOCKET SETS
  - 3/8-INCH DRIVE
  - 1/2-INCH DRIVE
- HAMMERS
  - SLEDGE
  - BALL PEEN
  - DEAD BLOW

I) DISASSEMBLY

I-1) Clamp coupling (2) in vise.

I-1.1) Unscrew and remove crossover (3) from mandrel (1).

I-1.2) Remove lower spacer (4) from mandrel (1)

I-1.3) Remove lower cup retainer (6) and lower cup assembly (5) from mandrel (1).

I-1.3.1) Remove o-ring (7) from lower cup assembly (5).

I-1.4) Remove upper spacer (4) from mandrel (1).

I-1.5) Remove upper cup retainer (6) and upper cup assembly (5) from mandrel (1).

I-1.5.1) Remove o-ring (7) from upper cup assembly (5).

I-1.6) Unscrew and remove mandrel (1) from coupling (2).

I-2) Unclamp coupling (2) and remove from vise.

J) ASSEMBLY

NOTE$_1$: Clean and inspect all parts. Replace all worn and damaged parts. Install parts in proper order, and orientation and tighten/torque all connections properly.

J-1) Clamp coupling (2) in vise.

J-1.1) Screw mandrel (1) into coupling (2).

J-1.2) Install o-rings (7) in o-ring grooves in cup assemblies (5).

J-1.3) Install upper cup retainer (6) onto mandrel (1).

J-1.4) Install upper cup assembly (5) onto mandrel (1).

CAUTION$_3$: Do not rip or tear o-ring during installation.

J-1.5) Install upper spacer (4) onto mandrel (1).

J-1.6) Install lower cup retainer (6) onto mandrel (1).

J-1.7) Install lower cup assembly (5) onto mandrel (1).

CAUTION$_3$: Do not rip or tear o-ring during installation.

J-1.8) Install lower spacer (4) onto mandrel (1).

J-1.9) Screw crossover (3) onto mandrel (1).

J-2) Unclamp coupling (2) from vise and remove assembled tool.

K) PARTS LIST

ITEM	QTY	DESCRIPTION	MATERIAL	P/N 43971-C
1	1	MANDREL	DLMS110	43970210-C
2	1	COUPLING	DLMS110	CP-BAC-C
3	1	CROSSOVER	DLMS110	CH-BAC-BAC-C
4	2	SPACER	DLMS60	43970821
5	2	CUP ASSEMBLY	80 DURO NITRILE	70270512
6	2	CUP RETAINER	DLMS35	43970831
7	2	341 O-RING	90 DURO NITRILE	90341

REDRESS KIT (RDK)		43971050
ASSEMBLED WEIGHT		54 LBS

K-1) ELASTOMER TRIM OPTIONS

NOTE$_2$: For temperature range, refer to Elastomer Trim Temperature Guide.

K-1.1) HSN

ITEM	QTY	DESCRIPTION	MATERIAL	P/N 43971H-C
5	2	CUP ASSEMBLY	80 DURO HSN	70270512H
7	2	341 O-RING	90 DURO HSN	90341H

REDRESS KIT (RDK)		43971050H

K-1.2) VITON

ITEM	QTY	DESCRIPTION	MATERIAL	P/N 43971V-C
5	2	CUP ASSEMBLY	80 DURO VITON	70270512V
7	2	341 O-RING	90 DURO VITON	90341V

REDRESS KIT (RDK)		43971050V

L) TECHNICAL ILLUSTRATION

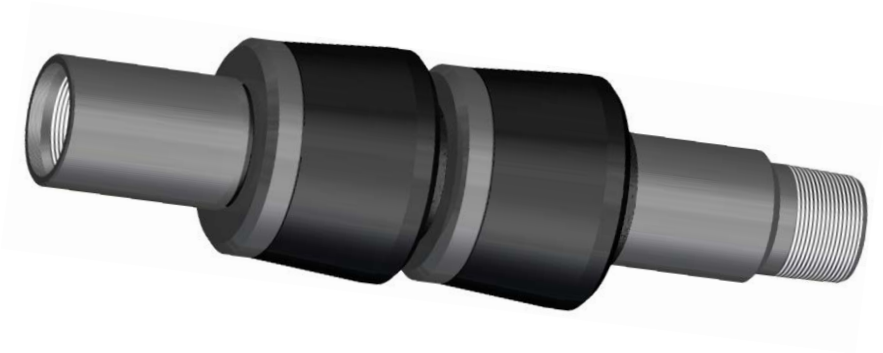

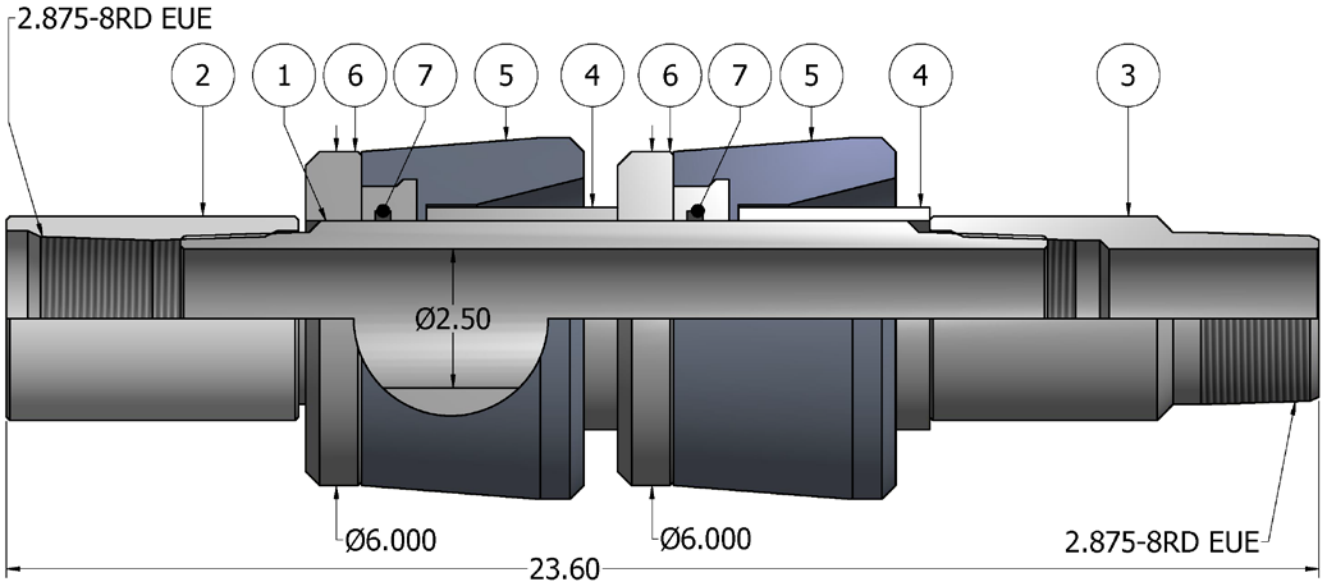

M) REVISION HISTORY

DATE	REVISION	DESCRIPTION OF CHANGES	REVISED BY	APPROVED BY
02/11/2016	A	Created new tech manual	-	-