A) DESCRIPTION

The Hydroset II Packer is a hydraulic set, mechanically held dual string production packer normally run above a single string hydraulic set or wireline set seal bore packer. Because no tubing manipulation is required to set this packer, the well head can be installed and flanged up before setting.

This packer is available with short string or long string setting capabilities and a variety of tubing connections. This packer is also adaptable for electrical submersible pump applications. This packer features a sequential upper slip release system designed to release each slip individually to reduce the pull required to release the packer. The angles on the upper slips and upper slip body result in the slips releasing smoothly from the casing.

B) SPECIFICATION GUIDE

CASING		
SIZE (INCHES)	**WEIGHT** (LBS/FT)	**RECOMMENDED HOLE SIZE** (INCHES)
7	26.0 – 32.0	6.094 – 6.276

TOOL			**PART NUMBER**
OD (INCHES)	**LONG STRING ID**	**SHORT STRING ID**	
	NOMINAL (INCHES)	**NOMINAL** (INCHES)	
5.938	1.94	1.94	94570V-GJF

THREAD CONNECTION	
LONG STRING BOX UP / PIN DOWN	**SHORT STRING** BOX UP / PIN DOWN
2-3/8 CS HYDRIL	2-3/8 CS HYDRIL

DIFFERENTIAL PRESSURE (MAX)	**TENSILE LOAD THRU TOOL** (MAX)
4,500 PSI	18,500 LBS*

*Using all eight (8 qty) releasing shear screws.

SETTING				
SETTING AREA (SQ INCHES)	**SHEAR VALUE** (PSI/SCREW)	**INITIATION PRESSURE** (PSI)	**MINIMUM SETTING PRESSURE** (PSI)	**RECOMMENDED SETTING PRESSURE** (PSI)
15.57	153	1,220	1,800	2,700

RELEASING
Shear release is adjustable from 15,000 to 40,000 lbs (5,000 lbs increments). Minimum of 3 shear screws required.

C) PRE-INSTALLATION INSPECTION PROCEDURES

CAUTION$_1$: D&L ships tool connections made-up **HAND TIGHT**—labeled with hand-tight tape on the tool (Fig. 1)—unless stated otherwise. Tighten/torque all connections properly before operating tool.

Fig. 1

GENERAL THREAD CONNECTION TORQUE RECOMMENDATIONS			
STUB ACME / ACME THREADS	**INTERNAL TAPERED TUBING THREADS**		**PREMIUM THREADS**
	UP TO 2-3/8”	**GREATER THAN 2-3/8”**	
600 – 800 FT-LBS	600 – 800 FT-LBS	800 – 1,200 FT-LBS	Consult thread manufacturer’s recommendations.

NOTE$_2$: Do not tighten long string mandrel (2) into flat top (1) with more than 200 ft-lbs of torque.

Before first use, D&L recommends disassembly and inspection of the tool unless stated otherwise. Ensure parts have not been damaged during shipping. Replace damaged parts with D&L replacement parts. Contact D&L sales for replacement part information.

Re-assemble the tool after inspection. Install parts in the correct order and orientation. Properly tighten connections.

Before re-using the tool, D&L recommends disassembly and inspection of the tool. Clean parts and ensure parts are in good working condition. Replace worn or damaged parts with D&L replacement parts.

When redressing the tool, D&L recommends replacement of all seals, elements, o-rings, shear screws, etc. Contact D&L sales for redress kit and/or other replacement part information.

D) OPERATION

CAUTION$_2$: Do not run the tool without properly tightening connections. Running the tool with loose connections may damage the tool and cause malfunction.

When tubing pressure is applied to the packer, the inlet port allows pressure differential to be present in the setting chamber. This differential forces the setting mandrel to separate from the setting cylinder, shearing the setting shear screws. The setting cylinder is forced down, which shears the lower slip body shear screws and sets the lower slips. The setting mandrel is forced up, which shears the upper slip body shear screws, and sets the upper slips and packs off the elements. Any relative motion between the setting cylinder and the setting mandrel is held in place by the lock ring, which will ratchet in only one direction. With a pressure differential from above, the force is transferred through the outer components of the packer and is supported by the lower slips. With the pressure differential from below, the force transfers through the outer components of the packer and is supported by the upper slips.

D-1) SETTING PROCEDURES

Running speed is critical, especially in heavy or viscous fluid where excess speed can result in swabbing off the packing element or in creating pressure waves which could lead to creating a preset condition. As a guide it is recommended that running speed should not be more than 30 seconds per joint (range II or 30 feet). **Do not exceed this speed**, particularly when running the packer in the heaviest weight casing for the range for which the packer is dressed.

A run in the well with a junk basket and suitable sized gauge ring or a bit and scraper is strongly recommended prior to running. The location of any tight spots should be noted and the running speed for the packer through these spots should be reduced.

Being a hydraulically set packer, it can be subject to preset conditions by pressure waves through the fluid. A slow steady running speed should be used and sudden stops and starts, such as when setting or pulling slips, should be avoided. Make up the packer to the tubing string in the desired position and to the required torque.

Allow at least 30 minutes for the packer to equalize thermally before setting. Temporarily plug the long string below the packer and apply a minimum of 1,800 psi differential in the tubing at the packer and hold it for 30 minutes. The packer should now be fully set and can be pressure tested if desired.

D) OPERATION (cont’d)

D-2) RELEASING PROCEDURES

The packer is released by a straight pick up on the long string. The shear release value is adjustable from 15,000 lbs to 40,000 lbs (in 5,000 lbs. increments—see technical illustration). A minimum of 3 shear screws are required.

The long string mandrel can carry a maximum of 58,500 lbs below the packer. If the amount of tension required to shear the releasing shear screws plus the weight below the tool exceeds 58,500 lbs, a Telescoping Union should be run directly below the packer.

E) ELASTOMER TRIM TEMPERATURE GUIDE

TEMPERATURE RANGE (F°)			
TEMPERATURE RANGE (F°)	DUROMETER		
	END	MIDDLE	END
70° - 125°	60	60	60
125° - 300°	80	70	80
300° +	Contact D&L Sales		

RUBBER TYPE	TEMPERATURE RANGE
NITRILE	70° - 250°F
HSN (HNBR)	70° - 300°F
VITON	100° - 350°F

F) RECOMMENDED HAND TOOLS

- VISE
- GLOVES
- ALLEN WRENCHES
- TAPE MEASURE
- O-RING PICK
- BAR
  - 1/2-INCH
  - 3/4-INCH
- PAINT BRUSH, 2-INCH
- PIPE WRENCH, 3-FT (2 EA)
- “CHEATER” PIPE, 4-FT LONG
- ADJUSTABLE WRENCH, 12-INCH
- CORDLESS DRILL, 18V
- SNAP RING SPREADER PLIERS
- ALIGNING PUNCH
- BOLTS, 1/4-20 X 1-1/4” LONG (4EA)
- SCREWDRIVER SET, FLAT-TIPPED
- SOCKET SETS
  - 3/8-INCH DRIVE
  - 1/2-INCH DRIVE
- HAMMERS
  - SLEDGE
  - BALL PEEN
  - DEAD BLOW

G) DISASSEMBLY

G-1) Clamp flat top (1) in vise.

G-1.1) Starting at upper end of tool, unscrew and remove couplings (10) from pup joints (20, 4).

G-1.2) Unscrew and remove pup joints (20, 4) from flat top (1).

G-1.3) Moving to lower end of tool, unscrew and remove crossover (5) from long string mandrel (2).

G-1.4) Unscrew and remove crossover (5) from pup joint (4).

G-1.5) Unscrew and remove pup joint (4) from lower slip body cap (19).

G-1.6) Unscrew and remove shear screws (25) from shear sleeve (24).

G-1.7) Unscrew and remove shear sleeve (24) from lower slip body cap (19).

G-1.8) Unscrew and remove cap screws (23) from lower cone (16).

G-1.9) Unscrew and remove shear screws (26) from lower slip body (18).

G-1.10) Wedge lower slips (17) outwards (if needed). Remove lower slip body assembly and disassemble:

G-1.10.1) Remove wedges (if needed). Remove lower slips (17) from lower slip body (18).

G-1.10.1.1) Unscrew and remove button head cap screws (21) from lower slips (17) and remove slip springs (27).

G) DISASSEMBLY (cont’d)

G-1.10.2) Unscrew and separate lower slip body (18) from lower slip body cap (19).

G-1.10.2.1)Remove o-ring (28) from lower slip body cap (19).

G-1.11) Remove pick-up ring (11) from long string mandrel (2)

G-1.12) Remove setting mandrel assembly and disassemble:

G-1.12.1) Unscrew and remove lower cone (16) from setting chamber (15).

G-1.12.1.1) Remove o-rings (28, 29) from lower cone (16).

G-1.12.2) Unscrew and remove lock ring (7) from lower end of setting mandrel (22).

G-1.12.3) Unscrew and remove shear screws (26) from setting chamber (15).

G-1.12.4) Remove setting chamber (15) from setting mandrel (22).

G-1.12.4.1) Remove o-rings (30) from setting chamber (15).

G-1.12.5) Remove o-rings (28) from setting mandrel (22).

G-1.13) Remove elements (13, 14) and rubber spacers (12) from mandrels (2, 3).

G-1.14) Unscrew and remove long string mandrel (2) and short string mandrel (3) from flat top (1).

CAUTION$_3$: Do **NOT** wrench or clamp on seal surfaces.

G-1.15) Unscrew and remove cap screws (23) from upper cone (9).

G-1.16) Unscrew and remove shear screws (26) from upper slip body (6).

G-1.17) Wedge upper slips (8) outwards (if needed). Remove upper cone (9) from upper slip body (6).

G-1.17.1) Remove o-rings (28) from upper cone (9).

G-1.17.2) Remove wedges (if needed). Remove upper slips (8) from upper slip body (6).

G-1.17.2.1) Unscrew and remove button head cap screws (21) from upper slips (8) and remove slip springs (27).

G-1.18) Unscrew and remove upper slip body (6) from flat top (1).

G-2) Unclamp and remove flat top (1) from vise.

G-2.1) Remove o-rings (28) from flat top (1).

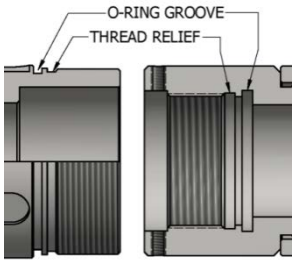

Fig. 2

H) ASSEMBLY

NOTE$_1$: Clean and inspect all parts. Replace all worn and damaged parts. Install parts in proper order, and orientation and tighten/torque all connections properly.

CAUTION$_4$: To ensure tool operates properly, install o-rings in o-ring grooves **NOT** thread reliefs (Fig. 2).

H-1) Install o-rings (28) in o-ring grooves in flat top (1).

H-2) Clamp flat top (1) in vise

H-2.1) Screw upper slip body (6) onto flat top (1).

H-2.2) Assemble upper slip assemblies and install:

H-2.2.1) Place slip springs (27) onto upper slips (8) and screw button head cap screws (21) into upper slips (8) to secure slip springs (27).

NOTE$_2$: Install two (2ea) springs per slip (Fig. 3).

H-2.2.2) Install upper slip assemblies into upper slip body (6). Wedge slips outwards.

CAUTION$_5$: Slips must be fully extended to prevent hitting the mandrels when installed.

Fig. 3

H) ASSEMBLY (cont’d)

H-2.3) Install o-rings (28) in o-ring grooves in upper cone (9).

H-2.4) Install upper cone (9) into upper slip body (6). Align threaded holes in upper slip body (6) with pocket holes in upper cone (9). Align threaded holes in upper cone (9) with slots in upper slip body (6).

H-2.5) Screw cap screws (23) into upper cone (9).

H-2.6) Screw shear screws (26) into upper slip body (6). Tighten until shear screws (26) make contact with upper cone (9). Back shear screws (26) out 1/4 turn.

H-2.7) Screw short string mandrel (3) and long string mandrel (2) into flat top (1). Remove wedges from upper slips (8).

CAUTION$_3$: Do NOT wrench or clamp on seal surfaces.

CAUTION$_6$: Do NOT rip or tear o-rings while installing.

H-2.8) Install elements (13, 14) and rubber spacers (12) onto mandrels (2, 3).

H-2.9) Assemble setting mandrel assembly and install (Figs. 4, 5):

H-2.9.1) Install o-rings (28) in o-ring grooves in setting mandrel (22).

H-2.9.2) Install o-rings (30) in o-ring grooves in setting chamber (15).

H-2.9.3) Gently tap setting mandrel (22) into setting chamber (15). Align shear screw groove in setting mandrel (22) with threaded holes in setting chamber (15).

CAUTION$_6$: Do NOT rip or tear o-ring while installing.

H-2.9.4) Temporarily screw one shear screw (26) into setting chamber (15) to hold parts together.

H-2.9.5) Install lock ring (7) into bottom end of setting chamber (15) and screw onto setting mandrel (22).

H-2.9.6) Install o-rings (28, 29) in o-ring grooves in lower cone (16).

H-2.9.7) CAREFULLY screw lower cone (16) into setting chamber (15) until they shoulder.

CAUTION$_6$: Do NOT rip or tear o-rings while installing.

H-2.9.8) Rotate setting chamber (15) and lower cone (16) in right-hand motion to align holes for mandrels (2, 3). Loosen shear screw (26) from setting chamber (15) as necessary

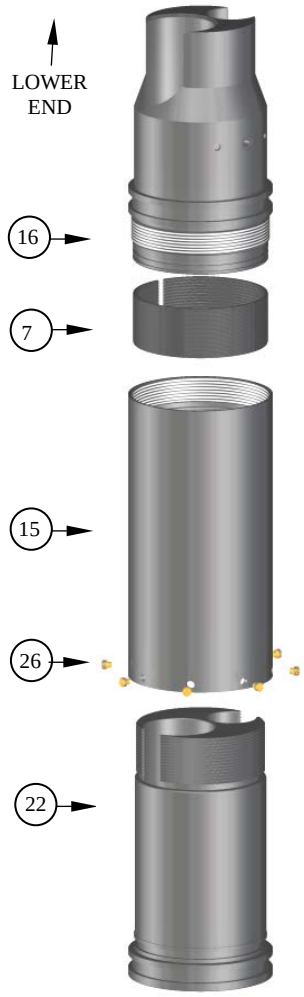

Fig. 4

NOTE$_6$: O-rings not shown.

H-2.9.9) Screw shear screws (26) into setting chamber (15) (Fig. 3). Tighten until shear screws (26) make contact with setting mandrel (22). Back shear screws (26) out 1/4 turn.

H-2.9.10) Install setting mandrel assembly onto mandrels (2, 3).

CAUTION$_6$: Do NOT rip or tear o-rings while installing.

H-2.10) Install pick-up ring (11) in pick-up ring groove in long string mandrel (2).

H-2.11) Assemble lower slip body assembly and install:

H-2.11.1) Install o-ring (28) in o-ring groove in lower slip body cap (19).

H-2.11.2) Screw lower slip body (18) onto lower slip body cap (19).

H) ASSEMBLY (cont’d)

H-2.11.3) Assemble lower slip assemblies and install:

H-2.11.3.1) Place slip springs (27) onto lower slips (17) and screw button head cap screws (21) into lower slips (17) to secure slip springs (27).

NOTE$_5$: Install two (2ea) springs per slip (Fig. 5).

H-2.11.3.2) Install lower slip assemblies onto lower slip body (18). Wedge slips outwards.

Fig. 5

H-2.11.4) Install lower slip body assembly onto mandrels (2, 3) and onto lower cone (16). Align threaded holes in lower slip body (18) with pocket holes in lower cone (16). Align threaded holes in lower cone (16) with slots in lower slip body (18).

NOTE$_3$: Back off lower slip body cap (19) as needed to align mandrels (2, 3).

CAUTION$_6$: Do NOT rip or tear o-rings while installing.

H-2.12) Screw cap screws (23) into lower cone (16).

H-2.13) Screw shear screws (26) into lower slip body (18). Tighten until shear screws (26) make contact with lower cone (16). Back shear screws (26) out 1/4 turn. Remove wedges from lower slips (17).

H-2.14) Screw shear sleeve (24) into lower slip body cap (19) until shouldered. Back off shear sleeve (24) as needed to align threaded holes in shear sleeve (24) with shear screw groove in long string mandrel (2).

H-2.15) Screw shear screws (25) into shear sleeve (24). Tighten until shear screws (25) make contact with long string mandrel (2). Back shear screws (25) out 1/4 turn.

NOTE$_4$: Install a minimum of three (3qty) shear screws (25). Install additional shear screws (25) as needed to achieve desired shear value.

H-2.16) Screw crossover (5) onto long string mandrel (2).

H-2.17) Screw pup joint (4) into lower slip body cap (19).

H-2.18) Screw crossover (5) onto pup joint (4).

H-2.19) Moving to upper end of tool, screw pup joints (20, 4) into flat top (1).

H-2.20) Screw couplings (10) onto pup joints (20, 4).

H-3) Unclamp flat top (1) from vise and remove assembled tool.

I) PRESSURE TEST

I-1) ASSEMBLY

NOTE$_8$: Prior to testing, all o-rings must be properly installed and in good condition (no rips, tears, cuts, etc).

I-1.1) Remove all but one of setting shear screws (26) from setting chamber (15).

I-1.2) Install two halves of pressure test ring (P1) into groove in lower cone (16).

I-1.3) Screw cap screws (P3) into pressure test ring (P1)

I-1.4) Install two halves of pressure test ring (P1) into groove in long string mandrel (2).

I-1.5) Screw cap screws (P3) into pressure test ring (P1)

I-1.6) Install threaded rods (P2) through holes in pressure test rings (P1).

I-1.7) For each end of threaded rods (4 total), install one (1ea) flat washer (P5) and two (2ea) hex nuts (P4). Thread hex nuts (P4) onto threaded rods (P2) until washers and nuts are snug against rings.

I-1.8) Fill the setting port with hydraulic oil or inhibited water.

I) PRESSURE TEST (cont’d)

I-1.9) Apply pressure to the setting port. Hold and observe for leaks.

WARNING: Do NOT exceed 1,000 PSI. To test over 1,000 PSI contact D&L sales.

I-1.10) Release pressure, remove pressure test kit, and re-install setting shear screws (26) in setting chamber (15).

I-2) PARTS LIST

ITEM	QTY	DESCRIPTION	MATERIAL	P/N 94570PTF
P1	2	PRESSURE TEST RING (2 HALVES PER SET)	DLMS110	94570PTF001
P2	8	THREADED ROD 1/2-13 UNC	STEEL	94555PTF002
P3	4	CAP SCREW 1/2-13 UNC X 1"	STEEL	SCS050C100
P4	32	STEEL HEX NUT .500-13 UNC	STEEL	SHN050C
P5	16	FLAT WASHER 1/2	STEEL	FW050

I-3) TECHNICAL ILLUSTRATION

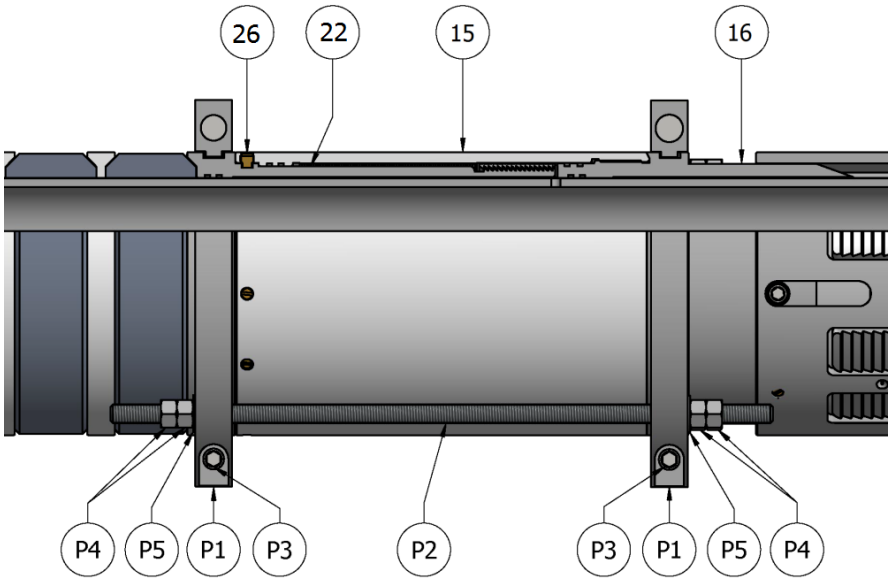

J) PARTS LIST

ITEM	QTY	DESCRIPTION	MATERIAL	PART NUMBER
1	1	FLAT TOP	DLMS80	94570600BB
2	1	LONG STRING MANDREL	DLMS110	94520200
3	1	SHORT STRING MANDREL	DLMS80	94520210
4	2	PUP JOINT	DLMS80	PJ-BBB-24-B
5	2	CROSSOVER	DLMS80	CH-BBB-GJFA-B-1
6	1	UPPER SLIP BODY	DLMS110	94570320
7	1	LOCK RING	DLMS80	94570725

J) PARTS LIST (cont’d)

ITEM	QTY	DESCRIPTION	MATERIAL	PART NUMBER
8	4	UPPER SLIP	DLMS80	90570111-1
9	1	UPPER CONE	DLMS80	94570400BB
10	2	COUPLING	DLMS80	CP-GJFA-BBB-B-1
11	1	PICK-UP RING	DLMS80	94570760
12	2	RUBBER SPACER	DLMS80	94570840BB
13	1	ELEMENT	70 DURO VITON	94570511BBV
14	2	ELEMENT	80 DURO VITON	94570512BBV
15	1	SETTING CHAMBER	DLMS110	94570780
16	1	LOWER CONE	DLMS80	94570420BB
17	4	LOWER SLIP	DLMS80	90570131-1
18	1	LOWER SLIP BODY	DLMS80	94570315
19	1	LOWER SLIP BODY CAP	DLMS80	94570336BB
20	1	PUP JOINT 48”	DLMS80	PJ-BBB-48-B
21	8	BUTTON HEAD CAP SCREW #10-24 X 1/4	STEEL	BHSC1024C025
22	1	SETTING MANDREL	DLMS80	94570751BB
23	4	LOW HEAD CAP SCREW 3/8-16 UNC X 3/8	STEEL	LHSC037C037
24	1	SHEAR SLEEVE	DLMS60	94570740
25	8	SHEAR SCREW (5000#) 1/2-13 W/ .418 DOG POINT	DLM360BRS	65050902
26	16	SHEAR SCREW (2375#)	DLM360BRS	60100990
27	16	SLIP SPRING	DLMINC625	72455950
28	15	142 O-RING	VITON	90142V
29	2	160 O-RING	VITON	90160V
30	2	161 O-RING	VITON	90161V

REDRESS KIT (RDK)		94570-B-B-050V
ASSEMBLED WEIGHT		315 LBS

K) TECHNICAL ILLUSTRATION

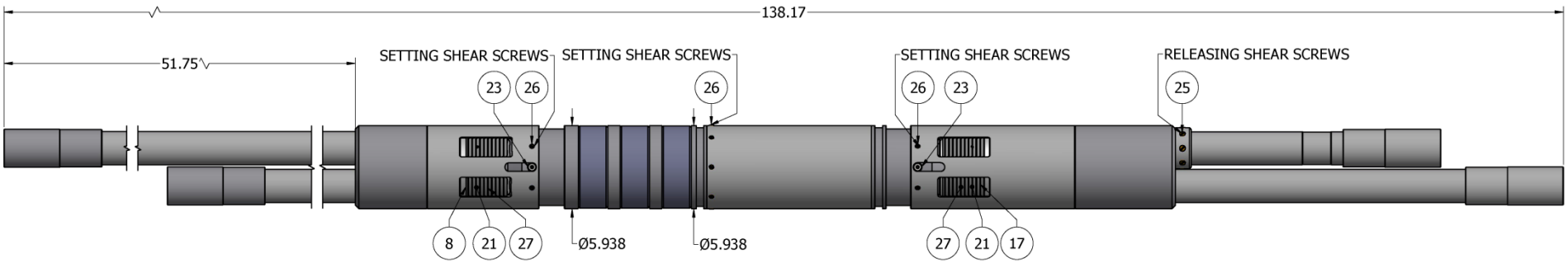

NOTE: AFTER INSTALLING SETTING SHEAR SCREWS, FILE FLUSH WITH TOOL OD.

K) TECHNICAL ILLUSTRATION (cont’d)

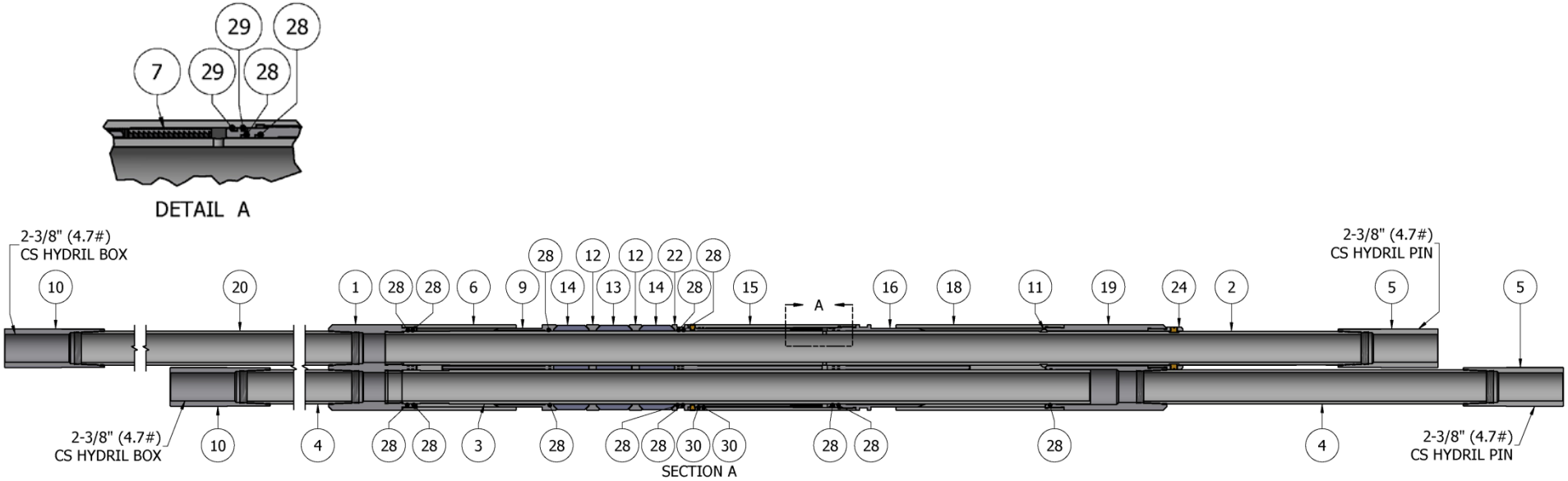

L) REVISION HISTORY

DATE	REVISION	DESCRIPTION OF CHANGES	REVISED BY	APPROVED BY
12/08/2015	A	Created new manual	-	-