A) DESCRIPTION

The Adjustable Union allows the distance between two pieces of equipment to be adjusted per downhole requirements prior to placing equipment. Prior to installation downhole, the length of the Adjustable Union can be extended or shortened by removing the key from the key holder and screwing the mandrel up or down the tool. The length of the Adjustable Union can then be locked in place by re-inserting the key.

B) SPECIFICATION GUIDE

TUBING SIZE (INCHES)	TOOL OD (INCHES)	TOOL ID (INCHES)	THREAD CONNECTION BOX UP / PIN DOWN	TOOL LENGTH (INCHES)		STROKE LENGTH (INCHES)	PART NUMBER
				CONTRACTED	EXTENDED		
2-3/8	3.00	1.75	2-3/8 (4.7#) CS HYDRIL	45.07	69.07	24	53520-XGJFA 53520H-XGJFA[1] 53520V-XGJFA[2]

Elastomer Trim Options: [1]HSN, [2]Viton

NOTE$_1$: Other tool lengths available. Contact D&L Sales for more information.

SAFE WORKING PRESSURE (MAX)	TENSILE LOAD THRU TOOL (MAX)	ROTATIONAL TORQUE THRU TOOL (MAX)
7,000 PSI	53,500 LBS	700 FT-LBS

C) PRE-INSTALLATION INSPECTION PROCEDURES

CAUTION$_1$: D&L ships tool connections made-up **HAND TIGHT**—labeled with hand-tight tape on the tool (Fig. 1)—unless stated otherwise. Tighten/torque all connections properly before operating tool.

Fig. 1

GENERAL THREAD CONNECTION TORQUE RECOMMENDATIONS			
STUB ACME / ACME THREADS	INTERNAL TAPERED TUBING THREADS		PREMIUM THREADS
	UP TO 2-3/8”	GREATER THAN 2-3/8”	
600 – 800 FT-LBS	600 – 800 FT-LBS	800 – 1,200 FT-LBS	Consult thread manufacturer’s recommendations.

Before first use, D&L recommends disassembly and inspection of the tool unless stated otherwise. Ensure parts have not been damaged during shipping. Replace damaged parts with D&L replacement parts. Contact D&L sales for replacement part information.

Re-assemble the tool after inspection. Install parts in the correct order and orientation. Properly tighten connections.

Before re-using the tool, D&L recommends disassembly and inspection of the tool. Clean parts and ensure parts are in good working condition. Replace worn or damaged parts with D&L replacement parts.

When redressing the tool, D&L recommends replacement of all o-rings. Contact D&L sales for redress kit and/or other replacement part information.

D) ELASTOMER TRIM TEMPERATURE GUIDE

RUBBER TYPE	TEMPERATURE RANGE
NITRILE	70° - 300°F
HSN (HNBR)	70° - 325°F
VITON	100° - 350°F

E) RECOMMENDED HAND TOOLS

- VISE
- GLOVES
- ALLEN WRENCHES
- TAPE MEASURE
- O-RING PICK
- BAR
  - 1/2-INCH
  - 3/4-INCH
- PAINT BRUSH, 2-INCH
- PIPE WRENCH, 3-FT (2 EA)
- STRAP WRENCH
- “CHEATER” PIPE, 4-FT LONG
- ADJUSTABLE WRENCH, 12-INCH
- CORDLESS DRILL, 18V
- SNAP RING SPREADER PLIERS
- ALIGNING PUNCH
- SCREWDRIVER SET, FLAT-TIPPED
- SOCKET SETS
  - 3/8-INCH DRIVE
  - 1/2-INCH DRIVE
- HAMMERS
  - SLEDGE
  - BALL PEEN
  - DEAD BLOW

F) STORAGE RECOMMENDATIONS

When preparing the tool for storage, follow the Pre-Installation Inspection Procedures. Re-assemble the tool with connections hand-tight only and in running position if applicable.

Store the tool, if possible, in an enclosed, temperature and humidity controlled environment. Avoid excessively high temperatures over long periods of time. Shield elastomeric parts from ultraviolet light sources. Keep tool dry and protected from condensation. Do not store in contact with or near volatile or corrosive chemicals. Do not store near ozone generating equipment or operations such as welding.

G) DISASSEMBLY

NOTE$_2$: Support tool during disassembly and assembly with jack stands as needed.

G-1) Clamp top sub (1) in vise.

G-1.1) Unscrew and remove changeover (5) from mandrel (1).

G-1.2) Unscrew and remove set screws (8) from retaining sleeve (6)

G-1.3) Remove retaining sleeve (6) from mandrel (2)

G-1.4) Remove key (7) from key holder (4).

G-1.5) Unscrew and remove set screws (8) from lower end of outer sleeve (3).

G-1.6) Unscrew key holder (4) from outer sleeve (3). Unscrew key holder from mandrel (1) threads and remove from mandrel.

G-1.7) Remove mandrel (2) from outer sleeve (3).

G-1.7.1) Remove o-rings (9) from mandrel (2).

G-1.8) Unscrew and remove set screws (8) from outer sleeve (3).

G-1.9) Unscrew and remove outer sleeve (3) from top sub (1).

G-2) Unclamp and remove top sub (1) from vise.

G-2.1) Remove o-ring (9) from top sub (1).

H) ASSEMBLY

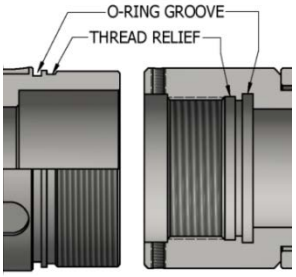

Fig. 2

NOTE$_3$: Clean and inspect all parts. Replace all worn and damaged parts. Install parts in proper order, and orientation and tighten/torque all connections properly.

CAUTION$_2$: To ensure tool operates properly, install o-rings in o-ring grooves **NOT** thread reliefs unless stated otherwise (Fig. 2).

NOTE$_2$: Support tool during disassembly and assembly with jack stands as needed.

H-1) Install o-ring (9) in o-ring groove of top sub (1).

H-2) Clamp top sub (1) in vise.

H-2.1) Screw outer sleeve (3) onto top sub (1).

CAUTION$_3$: Do not rip or tear o-ring during installation.

H-2.2) Screw set screws (8) into upper end of outer sleeve (3).

H-2.3) Install o-rings (9) in o-ring grooves in mandrel (2).

H-2.4) Install mandrel (2) into outer sleeve (3).

CAUTION$_3$: Do not rip or tear o-rings during installation.

H-2.5) Install key holder (4) onto mandrel (2). Screw onto mandrel (2) to obtain desired Adjustable Union length.

H-2.6) Screw key holder (4) into outer sleeve (3).

H-2.7) Screw set screws (8) into lower end of outer sleeve (3).

H-2.8) Align key slot in key holder (4) with groove in mandrel (2). Install key (7) into key holder.

H-2.9) Install retaining sleeve (6) onto mandrel (2) and onto key (7). Align threaded holes in retaining sleeve with pocket holes in key holder (4).

H-2.10) Screw set screws (8) into retaining sleeve (6).

H-2.11) Screw changeover (5) onto mandrel (2).

H-3) Unclamp top sub (1) and remove assembled tool from vise.

I) PARTS LIST

ITEM	QTY	DESCRIPTION	MATERIAL	P/N 53520-XGJFA
1	1	TOP SUB	L-80	53520610-BGJFA
2	1	MANDREL	DLMS80	53520210
3	1	OUTER SLEEVE	DLMS80	53520620
4	1	KEY HOLDER	DLMS80	53520630
5	1	CHANGEOVER	L-80	CH2062N-GJFA-B
6	1	RETAINING SLEEVE	DLMS80	53520910
7	1	KEY 1/4 X 1/4 X 1”	DLMS60	KS025X025X100
8	8	SET SCREW 1/4-20 UNC X 1/4	STEEL	SSS025C025
9	3	330 O-RING	90 DURO NITRILE	90330

REDRESS KIT (RDK)		53520050
ASSEMBLED WEIGHT		43 LBS

I-1) ELASTOMER TRIM OPTIONS

I-1.1) HSN

NOTE$_4$: For temperature range, refer to Elastomer Trim Temperature Guide.

ITEM	QTY	DESCRIPTION	MATERIAL	P/N 53520H-XGJFA
9	3	330 O-RING	90 DURO HSN	90330H

REDRESS KIT (RDK)		53520050H

I-1.2) VITON

NOTE$_4$: For temperature range, refer to Elastomer Trim Temperature Guide.

ITEM	QTY	DESCRIPTION	MATERIAL	P/N 53520V-XGJFA
9	3	330 O-RING	90 DURO VITON	90330V

REDRESS KIT (RDK)		53520050V

J) TECHNICAL ILLUSTRATION

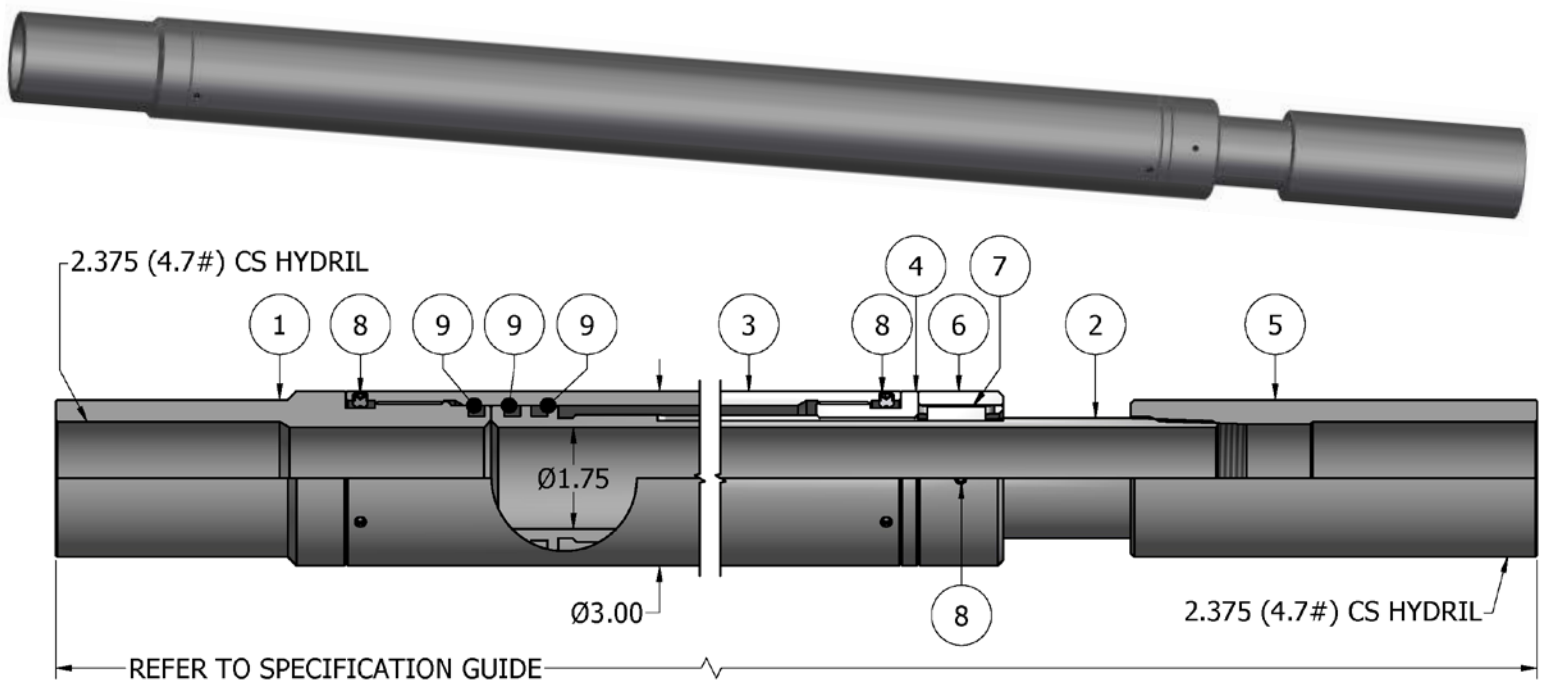

K) REVISION HISTORY

DATE	REVISION	DESCRIPTION OF CHANGES	REVISED BY	APPROVED BY
07/08/2015	A	Created new manual	-	-